owner.ford.com

ford.ca

May 2017
Second Printing
Owner's Manual
Fiesta
Litho in U.S.A.

FSC
MIX
Paper
FSC® C102270

HE8J 19A321 AB

2017 | OWNER'S MANUAL

FIESTA

Go Further

The information contained in this publication was correct at the time of going to print. In the interest of continuous development, we reserve the right to change specifications, design or equipment at any time without notice or obligation. No part of this publication may be reproduced, transmitted, stored in a retrieval system or translated into any language in any form by any means without our written permission. Errors and omissions excepted.

© Ford Motor Company 2017

All rights reserved.

Part Number: HE8J 19A321 AB 201607 20170330115108

Table of Contents

Introduction
About This Manual.....7
Symbols Glossary.....7
Data Recording.....9
California Proposition 65.....11
Perchlorate.....11
Ford Credit.....11
Replacement Parts Recommendation.....12
Special Notices.....12
Mobile Communications Equipment.....13
Export Unique Options.....13

Environment
Protecting the Environment.....15

Child Safety
General Information.....16
Installing Child Restraints.....17
Booster Seats.....23
Child Restraint Positioning.....25
Child Safety Locks.....27

Seatbelts
Principle of Operation.....29
Fastening the Seatbelts.....30
Seatbelt Height Adjustment.....32
Seatbelt Warning Lamp and Indicator Chime.....32
Seatbelt Reminder.....33
Child Restraint and Seatbelt Maintenance.....35
Seatbelt Extension.....35

Personal Safety System™
Personal Safety System™.....36

Supplementary Restraints System
Principle of Operation.....37
Driver and Passenger Airbags.....38
Front Passenger Sensing System.....39
Side Airbags.....42
Driver Knee Airbag.....43
Side Curtain Airbags.....43
Safety Canopy™ - Vehicles Built From: 06-03-2017.....44
Crash Sensors and Airbag Indicator.....45
Airbag Disposal.....46

Keys and Remote Controls
General Information on Radio Frequencies.....47
Remote Control.....47
Replacing a Lost Key or Remote Control.....51

MyKey™
Principle of Operation.....52
Creating a MyKey.....53
Clearing All MyKeys.....53
Checking MyKey System Status.....55
Using MyKey With Remote Start Systems.....55
MyKey Troubleshooting.....55

Doors and Locks
Locking and Unlocking.....57
Manual Liftgate.....60
Keyless Entry.....61
Interior Luggage Compartment Release.....63

Security
Passive Anti-Theft System.....65
Anti-Theft Alarm.....66

2017 Fiesta (CCT) Canada/United States of America, HE8J 19A321 AB enUSA, Edition date: 201607, Second Printing

Table of Contents

Steering Wheel
Adjusting the Steering Wheel.....68
Audio Control.....68
Voice Control.....69
Cruise Control.....69

Wipers and Washers
Windshield Wipers.....70
Windshield Washers.....70
Rear Window Wiper and Washers.....71

Lighting
General Information.....72
Lighting Control.....72
Autolamps.....73
Instrument Lighting Dimmer.....74
Headlamp Exit Delay.....74
Daytime Running Lamps.....74
Front Fog Lamps.....75
Direction Indicators.....75
Interior Lamps.....75
Ambient Lighting.....76

Windows and Mirrors
Power Windows.....77
Exterior Mirrors.....78
Interior Mirror.....79
Moonroof.....80

Instrument Cluster
Gauges.....81
Warning Lamps and Indicators.....82
Audible Warnings and Indicators.....85

Information Displays
General Information.....86
Clock.....87
Trip Computer.....87
Personalized Settings.....88
Information Messages.....88

Climate Control
Manual Climate Control.....96
Automatic Climate Control.....97
Hints on Controlling the Interior Climate.....98
Heated Windows and Mirrors.....101
Cabin Air Filter.....101
Remote Start.....102

Seats
Sitting in the Correct Position.....103
Head Restraints.....103
Manual Seats.....105
Rear Seats.....106
Heated Seats.....107

Auxiliary Power Points
Auxiliary Power Points.....109
Cigar Lighter.....109

Storage Compartments
Center Console.....111
Overhead Console.....111

Starting and Stopping the Engine
General Information.....112
Ignition Switch.....112
Keyless Starting.....112
Starting a Gasoline Engine.....114
Switching Off the Engine.....115
Engine Block Heater.....115

Fuel and Refueling
Safety Precautions.....117
Fuel Quality.....117
Fuel Filler Funnel Location.....118
Running Out of Fuel.....118

2017 Fiesta (CCT) Canada/United States of America, HE8J 19A321 AB enUSA, Edition date: 201607, Second Printing

Table of Contents

Catalytic Converter.....119
Refueling.....120
Fuel Consumption.....122
Emission Control System.....123

Transmission

Manual Transmission.....126
Automatic Transmission.....127

Brakes

General Information.....132
Hints on Driving With Anti-Lock Brakes.....132
Parking Brake.....133
Hill Start Assist.....133

Traction Control

Principle of Operation.....135
Using Traction Control.....135

Stability Control

Principle of Operation.....136
Using Stability Control.....137

Parking Aids

Principle of Operation.....138
Rear Parking Aid.....138
Front Parking Aid.....140
Rear View Camera.....141

Cruise Control

Principle of Operation.....144
Using Cruise Control.....144

Driving Aids

Eco Mode.....146
Steering.....146

Load Carrying

Rear Under Floor Storage.....148
Cargo Nets.....148
Luggage Covers.....148
Load Limit.....149

Towing

Towing a Trailer.....155
Transporting the Vehicle.....155
Towing the Vehicle on Four Wheels.....155

Driving Hints

Breaking-In.....158
Economical Driving.....158
Driving Through Water.....158
Floor Mats.....159

Roadside Emergencies

Roadside Assistance.....160
Hazard Flashers.....161
Fuel Shutoff.....161
Jump Starting the Vehicle.....162

Customer Assistance

Getting the Services You Need.....165
In California (U.S. Only).....166
The Better Business Bureau (BBB) Auto Line Program (U.S. Only).....167
Utilizing the Mediation/Arbitration Program (Canada Only).....168
Getting Assistance Outside the U.S. and Canada.....168
Ordering Additional Owner's Literature.....169
Reporting Safety Defects (U.S. Only).....170
Reporting Safety Defects (Canada Only).....170

Fuses

Fuse Specification Chart.....172
Changing a Fuse.....180

2017 Fiesta (CCT) Canada/United States of America, HE8J 19A321 AB enUSA, Edition date: 201607, Second Printing

Maintenance

General Information....182
Opening and Closing the Hood....182
Under Hood Overview - 1.0L EcoBoost™....184
Under Hood Overview - 1.6L Duratec-16V Ti-VCT (Sigma)....185
Engine Oil Dipstick - 1.0L EcoBoost™....186
Engine Oil Dipstick - 1.6L Duratec-16V Ti-VCT (Sigma)....186
Engine Oil Check....186
Oil Change Indicator Reset....187
Engine Cooling Fan....188
Engine Coolant Check....188
Automatic Transmission Fluid Check....192
Brake Fluid Check....192
Clutch Fluid Check - Manual Transmission....193
Washer Fluid Check....193
Changing the 12V Battery....193
Checking the Wiper Blades....194
Changing the Front Wiper Blades....195
Changing the Rear Wiper Blades....195
Adjusting the Headlamps....195
Removing a Headlamp....197
Changing a Bulb - 5-Door....197
Changing a Bulb - 4-Door....202
Bulb Specification Chart....208
Changing the Engine Air Filter....209
Drive Belt Routing - 1.0L EcoBoost™....210
Drive Belt Routing - 1.6L Duratec-16V Ti-VCT (Sigma)....210

Vehicle Care

Cleaning Products....211
Cleaning the Exterior....212
Waxing....213
Cleaning the Engine....213
Cleaning the Windows and Wiper Blades....213
Cleaning the Interior....214
Cleaning the Instrument Panel and Instrument Cluster Lens....214
Cleaning Leather Seats....215
Repairing Minor Paint Damage....216
Cleaning the Wheels....216
Vehicle Storage....216

Wheels and Tires

General Information....219
Tire Care....219
Using Summer Tires....234
Using Winter Tires....234
Using Snow Chains....234
Tire Pressure Monitoring System....234
Changing a Road Wheel....238
Technical Specifications....242

Capacities and Specifications

Engine Specifications - 1.0L EcoBoost™....243
Engine Specifications - 1.6L Duratec-16V Ti-VCT (Sigma)....243
Transmission Specifications - 1.0L EcoBoost™, Automatic Transmission....243
Transmission Specifications - 1.6L Duratec-16V Ti-VCT (Sigma), Automatic Transmission....244
Transmission Specifications - 5-Speed Manual Transmission....245
Motorcraft Parts - 1.0L EcoBoost™....246
Motorcraft Parts - 1.6L Duratec-16V Ti-VCT (Sigma)....247
Vehicle Identification Number....248
Vehicle Certification Label....249
Transmission Code Designation....249
Capacities and Specifications - 1.0L EcoBoost™....250

2017 Fiesta (CCT) Canada/United States of America, HE8J 19A321 AB enUSA, Edition date: 201607, Second Printing

Capacities and Specifications - 1.6L Duratec-16V Ti-VCT (Sigma).....253

Audio System

General Information.....257
Audio Unit - Vehicles With: AM/FM/CD.....258
Audio Unit - Vehicles With: AM/FM/CD/SYNC.....262
Audio Unit - Vehicles With: Sony Audio System/Touchscreen Display.....266
Audio Unit - Vehicles With: Touchscreen Display.....268
Digital Radio.....269
Satellite Radio.....272
Audio Input Jack.....274
USB Port.....275
Media Hub.....275

SYNC™

General Information.....276
Using Voice Recognition.....278
Using SYNC™ With Your Phone.....281
SYNC™ Applications and Services.....294
SYNC™ AppLink™.....302
Using SYNC™ With Your Media Player.....304
SYNC™ Troubleshooting.....314

SYNC™ 3

General Information.....323
Home Screen.....334
Using Voice Recognition.....335
Entertainment.....341
Phone.....351
Navigation.....356
Apps.....364
Settings.....367
SYNC™ 3 Troubleshooting.....379

Accessories

Accessories.....392

Ford Protect

Ford Protect.....394

Scheduled Maintenance

General Maintenance Information.....396
Normal Scheduled Maintenance.....399
Special Operating Conditions Scheduled Maintenance.....402
Scheduled Maintenance Record.....404

Appendices

End User License Agreement.....414

2017 Fiesta (CCT) Canada/United States of America, HE8J 19A321 AB enUSA, Edition date: 201607, Second Printing

2017 Fiesta (CCT) Canada/United States of America, HE8J 19A321 AB enUSA, Edition date: 201607, Second Printing

ABOUT THIS MANUAL

Thank you for choosing Ford. We recommend that you take some time to get to know your vehicle by reading this manual. The more that you know about your vehicle, the greater the safety and pleasure you will get from driving it.

WARNING

Driving while distracted can result in loss of vehicle control, crash and injury. We strongly recommend that you use extreme caution when using any device that may take your focus off the road. Your primary responsibility is the safe operation of your vehicle. We recommend against the use of any hand-held device while driving and encourage the use of voice-operated systems when possible. Make sure you are aware of all applicable local laws that may affect the use of electronic devices while driving.

Note: *This manual describes product features and options available throughout the range of available models, sometimes even before they are generally available. It may describe options not fitted to the vehicle you have purchased.*

Note: *Some of the illustrations in this manual may show features as used in different models, so may appear different to you on your vehicle.*

Note: *Always use and operate your vehicle in line with all applicable laws and regulations.*

Note: *Pass on this manual when selling your vehicle. It is an integral part of your vehicle.*

This manual may qualify the location of a component as left-hand side or right-hand side. The side is determined when facing forward in the seat.

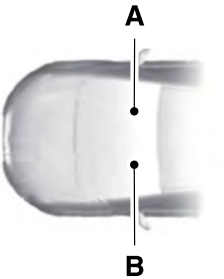

E154903

A Right-hand side.

B Left-hand side.

SYMBOLS GLOSSARY

These are some of the symbols you may see on your vehicle.

Air conditioning system

Air conditioning system lubricant type

Anti-lock braking system

Avoid smoking, flames or sparks

Battery

Battery acid

Brake fluid - non petroleum based

Brake system

2017 Fiesta (CCT) Canada/United States of America, HE8J 19A321 AB enUSA, Edition date: 201607, Second Printing

Cabin air filter

Check fuel cap

Child safety door lock or unlock

Child seat lower anchor

Child seat tether anchor

Cruise control

Do not open when hot

Engine air filter

Engine coolant

Engine coolant temperature

Engine oil

Explosive gas

Fan warning

Fasten seatbelt

Flammable

Front airbag

Front fog lamps

Fuel pump reset

Fuse compartment

Hazard warning flashers

Heated rear window

Heated windshield

Interior luggage compartment release

Jack

Keep out of reach of children

Lighting control

Low tire pressure warning

Maintain correct fluid level

Note operating instructions

Panic alarm

2017 Fiesta (CCT) Canada/United States of America, HE8J 19A321 AB enUSA, Edition date: 201607, Second Printing

Parking aid

Parking brake

Power steering fluid

Power windows front/rear

Power window lockout

Requires registered technician

Safety alert

See Owner's Manual

See Service Manual

Service engine soon

Side airbag

Shield the eyes

Stability control

Windshield wash and wipe

DATA RECORDING

Service Data Recording

Service data recorders in your vehicle are capable of collecting and storing diagnostic information about your vehicle. This potentially includes information about the performance or status of various systems and modules in the vehicle, such as engine, throttle, steering or brake systems. In order to properly diagnose and service your vehicle, Ford Motor Company (Ford of Canada in Canada), and service and repair facilities may access or share among them vehicle diagnostic information received through a direct connection to your vehicle when diagnosing or servicing your vehicle. Additionally, Ford Motor Company (Ford of Canada, in Canada) may, where permitted by law, use vehicle diagnostic information for vehicle improvement or with other information we may have about you, (for example, your contact information), to offer you products or services that may interest you. Data may be provided to our service providers such as part suppliers that may help diagnose malfunctions, and who are similarly obligated to protect data. We retain this data only as long as necessary to perform these functions or to comply with law. We may provide information where required in response to official requests to law enforcement or other government authorities or third parties acting with lawful authority or court order, and such information may be used in legal proceedings. For U.S. only (if equipped), if you choose to use connected apps and services, such as SYNC Vehicle Health Report or MyFord Mobile App, you consent that certain diagnostic information may also be accessed electronically by Ford Motor Company and Ford authorized service facilities, and that the diagnostic information may be used to provide

2017 Fiesta (CCT) Canada/United States of America, HE8J 19A321 AB enUSA, Edition date: 201607, Second Printing

services to you, personalizing your experience, troubleshoot, and to improve products and services and offer you products and services that may interest you, where permitted by law. For Canada only, for more information, please review the Ford of Canada privacy policy at www.ford.ca, including our U.S. data storage and use of service providers in other jurisdictions who may be subject to legal requirements in Canada, the United States and other countries applicable to them, for example, lawful requirements to disclose personal information to governmental authorities in those countries. See **SYNC™** (page 276).

Event Data Recording

This vehicle is equipped with an event data recorder. The main purpose of an event data recorder is to record, in certain crash or near crash-like situations, such as an airbag deployment or hitting a road obstacle; this data will assist in understanding how a vehicle's systems performed. The event data recorder is designed to record data related to vehicle dynamics and safety systems for a short period of time, typically 30 seconds or less.

The event data recorder in this vehicle is designed to record such data as:

- **How various systems in your vehicle were operating;**
- **Whether or not the driver and passenger safety belts were buckled/fastened;**
- **How far (if at all) the driver was depressing the accelerator and/or the brake pedal; and**
- **How fast the vehicle was traveling; and**
- **Where the driver was positioning the steering wheel.**

This data can help provide a better understanding of the circumstances in which crashes and injuries occur.

Note: ***Event data recorder data is recorded by your vehicle only if a non-trivial crash situation occurs; no data is recorded by the event data recorder under normal driving conditions and no personal data or information (e.g., name, gender, age, and crash location) is recorded (see limitations regarding 911 Assist and Traffic, directions and Information privacy below). However, parties, such as law enforcement, could combine the event data recorder data with the type of personally identifying data routinely acquired during a crash investigation.***

To read data recorded by an event data recorder, special equipment is required, and access to the vehicle or the event data recorder is needed. In addition to the vehicle manufacturer, other parties, such as law enforcement, that have such special equipment, can read the information if they have access to the vehicle or the event data recorder. Ford Motor Company and Ford of Canada do not access event data recorder information without obtaining consent, unless pursuant to court order or where required by law enforcement, other government authorities or other third parties acting with lawful authority. Other parties may seek to access the information independently of Ford Motor Company and Ford of Canada.

2017 Fiesta (CCT) Canada/United States of America, HE8J 19A321 AB enUSA, Edition date: 201607, Second Printing

Note: ***Including to the extent that any law pertaining to Event Data Recorders applies to SYNC or its features, please note the following: Once 911 Assist (if equipped) is enabled (set ON), 911 Assist may, through any paired and connected cell phone, disclose to emergency services that the vehicle has been in a crash involving the deployment of an airbag or, in certain vehicles, the activation of the fuel pump shut-off. Certain versions or updates to 911 Assist may also be capable of being used to electronically or verbally provide to 911 operators the vehicle location (such as latitude and longitude), and/or other details about the vehicle or crash or personal information about the occupants to assist 911 operators to provide the most appropriate emergency services. If you do not want to disclose this information, do not activate the 911 Assist feature.*** *See* ***SYNC™*** *(page 276).*

Additionally, when you connect to Traffic, Directions and Information (if equipped, U.S. only), the service uses GPS technology and advanced vehicle sensors to collect the vehicle's current location, travel direction, and speed ("vehicle travel information"), only to help provide you with the directions, traffic reports, or business searches that you request. If you do not want Ford or its vendors to receive this information, do not activate the service. For more information, see Traffic, Directions and Information, Terms and Conditions. See **SYNC™** (page 276).

CALIFORNIA PROPOSITION 65

WARNINGS

Some constituents of engine exhaust, certain vehicle components, certain fluids contained in vehicles and certain products of component wear contain or emit chemicals known to the State of California to cause cancer and birth defects or other reproductive harm.

Battery posts, terminals and related accessories contain lead and lead compounds, chemicals known to the State of California to cause cancer and reproductive harm. Batteries also contain other chemicals known to the State of California to cause cancer. Wash your hands after handling.

PERCHLORATE

Certain components in your vehicle such as airbag modules, seatbelt pretensioners and remote control batteries may contain perchlorate material. Special handling may apply for service or vehicle end of life disposal.

For more information visit:

Web Address
www.dtsc.ca.gov/hazard-ouswaste/perchlorate

FORD CREDIT

US Only

Ford Credit offers a full range of financing and lease plans to help you acquire your vehicle. If you have financed or leased your vehicle through Ford Credit, thank you for your business.

2017 Fiesta (CCT) Canada/United States of America, HE8J 19A321 AB enUSA, Edition date: 201607, Second Printing

We offer a number of convenient ways for you to contact us, and to manage your account.

Call 1-800-727-7000.

For more information about Ford Credit and access to the Account Manager, go to www.ford.com/finance.

REPLACEMENT PARTS RECOMMENDATION

We have built your vehicle to the highest standards using quality parts. We recommend that you demand the use of genuine Ford and Motorcraft parts whenever your vehicle requires scheduled maintenance or repair. You can clearly identify genuine Ford and Motorcraft parts by looking for the Ford, FoMoCo or Motorcraft branding on the parts or their packaging.

Scheduled Maintenance and Mechanical Repairs

One of the best ways for you to make sure that your vehicle provides years of service is to have it maintained in line with our recommendations using parts that conform to the specifications detailed in this Owner's Manual. Genuine Ford and Motorcraft parts meet or exceed these specifications.

Collision Repairs

We hope that you never experience a collision, but accidents do happen. Genuine Ford replacement collision parts meet our stringent requirements for fit, finish, structural integrity, corrosion protection and dent resistance. During vehicle development we validate that these parts deliver the intended level of protection as a whole system. A great way to know for sure you are getting this level of protection is to use genuine Ford replacement collision parts.

Warranty on Replacement Parts

Genuine Ford and Motorcraft replacement parts are the only replacement parts that benefit from a Ford Warranty. The Ford Warranty may not cover damage caused to your vehicle as a result of failed non-Ford parts. For additional information, refer to the terms and conditions of the Ford Warranty.

SPECIAL NOTICES

New Vehicle Limited Warranty

For a detailed description of what is covered and what is not covered by your vehicle's New Vehicle Limited Warranty, see the Warranty Manual that is provided to you along with your Owner's Manual.

Special Instructions

For your added safety, your vehicle is fitted with sophisticated electronic controls.

WARNINGS

You risk death or serious injury to yourself and others if you do not follow the instruction highlighted by the warning symbol. Failure to follow the specific warnings and instructions could result in personal injury.

NEVER use a rearward facing child restraint on a seat protected by an ACTIVE AIRBAG in front of it, DEATH or SERIOUS INJURY to the CHILD can occur.

2017 Fiesta (CCT) Canada/United States of America, HE8J 19A321 AB enUSA, Edition date: 201607, Second Printing

On Board Diagnostics Data Link Connector

WARNING

Do not connect wireless plug-in devices to the data link connector. Unauthorized third parties could gain access to vehicle data and impair the performance of safety related systems. Only allow repair facilities that follow our service and repair instructions to connect their equipment to the data link connector.

Your vehicle has an OBD Data Link Connector (DLC) that is used in conjunction with a diagnostic scan tool for vehicle diagnostics, repairs and reprogramming services. Installing an aftermarket device that uses the DLC during normal driving for purposes such as remote insurance company monitoring, transmission of vehicle data to other devices or entities, or altering the performance of the vehicle, may cause interference with or even damage to vehicle systems. We do not recommend or endorse the use of aftermarket plug-in devices unless approved by Ford. The vehicle Warranty will not cover damage caused by an aftermarket plug-in device.

MOBILE COMMUNICATIONS EQUIPMENT

WARNING

Driving while distracted can result in loss of vehicle control, crash and injury. We strongly recommend that you use extreme caution when using any device that may take your focus off the road. Your primary responsibility is the safe operation of your vehicle. We recommend against the use of any hand-held device while driving and encourage the use of voice-operated systems when possible. Make sure you are aware of all applicable local laws that may affect the use of electronic devices while driving.

Using mobile communications equipment is becoming increasingly important in the conduct of business and personal affairs. However, you must not compromise your own or others' safety when using such equipment. Mobile communications can enhance personal safety and security when appropriately used, particularly in emergency situations. Safety must be paramount when using mobile communications equipment to avoid negating these benefits. Mobile communication equipment includes, but is not limited to, cellular phones, pagers, portable email devices, text messaging devices and portable two-way radios.

EXPORT UNIQUE OPTIONS

For your particular global region, your vehicle may be equipped with features and options that are different from the features and options that are described in this Owner's Manual. A market unique supplement may be supplied that complements this book. By referring to the market unique supplement, if provided, you can properly identify those features,

2017 Fiesta (CCT) Canada/United States of America, HE8J 19A321 AB enUSA, Edition date: 201607, Second Printing

recommendations and specifications that are unique to your vehicle. This Owner's Manual is written primarily for the U.S. and Canadian Markets. Features or equipment listed as standard may be different on units built for export. **Refer to this Owner's Manual for all other required information and warnings.**

2017 Fiesta (CCT) Canada/United States of America, HE8J 19A321 AB enUSA, Edition date: 201607, Second Printing

PROTECTING THE ENVIRONMENT

You should play your part in protecting the environment. Correct vehicle usage and the authorized disposal of waste, cleaning and lubrication materials are significant steps toward this aim.

For details about Ford Motor Company's sustainability progress and initiatives visit:

Web Address
www.sustainability.ford.com

2017 Fiesta (CCT) Canada/United States of America, HE8J 19A321 AB enUSA, Edition date: 201607, Second Printing

GENERAL INFORMATION

See the following sections for directions on how to properly use safety restraints for children.

WARNINGS

Always make sure your child is secured properly in a device that is appropriate for their height, age and weight. Child safety restraints must be bought separately from your vehicle. Failure to follow these instructions and guidelines may result in an increased risk of serious injury or death to your child.

All children are shaped differently. The National Highway Traffic Safety Administration and other safety organizations, base their recommendations for child restraints on probable child height, age and weight thresholds, or on the minimum requirements of the law. We recommend that you check with a NHTSA Certified Child Passenger Safety

WARNINGS

Technician (CPST) to make sure that you properly install the child restraint in your vehicle and that you consult your pediatrician to make sure you have a child restraint appropriate for your child. To locate a child restraint fitting station and CPST, contact NHTSA toll free at 1-888-327-4236 or go to www.nhtsa.dot.gov. In Canada, contact Transport Canada toll free at 1-800-333-0371 or go to www.tc.gc.ca to find a Child Car Seat Clinic in your area. Failure to properly restrain children in child restraints made especially for their height, age and weight, may result in an increased risk of serious injury or death to your child.

On hot days, the temperature inside the vehicle can rise very quickly. Exposure of people or animals to these high temperatures for even a short time can cause death or serious heat related injuries, including brain damage. Small children are particularly at risk.

2017 Fiesta (CCT) Canada/United States of America, HE8J 19A321 AB enUSA, Edition date: 201607, Second Printing

Recommendations for Safety Restraints for Children

Child	Child size, height, weight, or age	Recommended restraint type
Infants or toddlers	Children weighing 40 lb (18 kg) or less (generally age four or younger).	Use a child safety seat (sometimes called an infant carrier, convertible seat, or toddler seat).
Small children	Children who have outgrown or no longer properly fit in a child safety seat (generally children who are less than 4 ft. 9 in. (1.45 m) tall, are greater than age four and less than age 12, and between 40 lb (18 kg) and 80 lb (36 kg) and upward to 100 lb (45 kg) if recommended by your child restraint manufacturer).	Use a belt-positioning booster seat.
Larger children	Children who have outgrown or no longer properly fit in a belt-positioning booster seat (generally children who are at least 4 ft. 9 in. (1.45 m) tall or greater than 80 lb (36 kg) or 100 lb (45 kg) if recommended by child restraint manufacturer).	Use a vehicle safety belt having the lap belt snug and low across the hips, shoulder belt centered across the shoulder and chest, and seatback upright.

- You are required by law to properly use safety seats for infants and toddlers in the United States and Canada.
- Many states and provinces require that small children use approved booster seats until they reach age eight, a height of 4 feet 9 inches (1.45 meters) tall, or 80 lb (36 kg). Check your local and state or provincial laws for specific requirements about the safety of children in your vehicle.
- When possible, always properly restrain children 12 years of age and under in a rear seating position of your vehicle. Accident statistics suggest that children are safer when properly restrained in the rear seating positions than in a front seating position. See **Front Passenger Sensing System** (page 39).

INSTALLING CHILD RESTRAINTS

Child Restraints

E142594

2017 Fiesta (CCT) Canada/United States of America, HE8J 19A321 AB enUSA, Edition date: 201607, Second Printing

Use a child safety restraint (sometimes called an infant carrier, convertible seat, or toddler seat) for infants, toddlers, or children weighing 40 lb (18 kg) or less (generally age four or younger).

Using Lap and Shoulder Belts

WARNINGS

Airbags can kill or injure a child in a child restraint. Never place a rear-facing child restraint in front of an active airbag. If you must use a forward-facing child restraint in the front seat, move the seat upon which the child restraint is installed all the way back.

Airbags can kill or injure a child in a child restraint. Properly restrain children 12 and under in the rear seat whenever possible.

Depending on where you secure a child restraint, and depending on the child restraint design, you may block access to certain seatbelt buckle assemblies and LATCH lower anchors, rendering those features potentially unusable. To avoid risk of injury, make sure occupants only use seating positions where they are able to be properly restrained.

When installing a child safety restraint with combination lap and shoulder belts:

- Use the correct seatbelt buckle for that seating position.
- Insert the belt tongue into the proper buckle until you hear a snap and feel it latch. Make sure the tongue is securely fastened in the buckle.
- Keep the buckle release button pointing up and away from the safety restraint, with the tongue between the child restraint and the release button, to prevent accidental unbuckling.
- Place your vehicle seat back in the upright position.
- Put the seatbelt in the automatic locking mode. See Step 5. This vehicle does not require the use of a locking clip.

Perform the following steps when installing the child restraint with combination lap and shoulder belts:

Note: *Although the child restraint illustrated is a forward facing child restraint, the steps are the same for installing a rear facing child restraint.*

E142528

1. Position the child safety restraint in a seat with a combination lap and shoulder belt.

E142529

2. Pull down on the shoulder belt and then grasp the shoulder belt and lap belt together.

2017 Fiesta (CCT) Canada/United States of America, HE8J 19A321 AB enUSA, Edition date: 201607, Second Printing

E142530

3. While holding the shoulder and lap belt portions together, route the tongue through the child restraint according to the child restraint manufacturer's instructions. Be sure the belt webbing is not twisted.

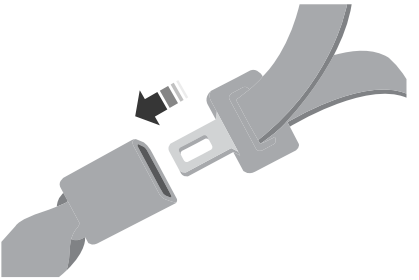

E142531

4. Insert the belt tongue into the proper buckle (the buckle closest to the direction the tongue is coming from) for that seating position until you hear a snap and feel the latch engage. Make sure the tongue is latched securely by pulling on it.

E142875

5. To put the retractor in the automatic locking mode, grasp the shoulder portion of the belt and pull downward until all of the belt is pulled out.

Note: *The automatic locking mode is available on the front passenger and rear seats. This vehicle does not require the use of a locking clip.*

6. Allow the belt to retract to remove slack. The belt will click as it retracts to indicate it is in the automatic locking mode.
7. Try to pull the belt out of the retractor to make sure the retractor is in the automatic locking mode (you should not be able to pull more belt out). If the retractor is not locked, unbuckle the belt and repeat Steps 5 and 6.

E142533

2017 Fiesta (CCT) Canada/United States of America, HE8J 19A321 AB enUSA, Edition date: 201607, Second Printing

8. Remove remaining slack from the belt. Force the seat down with extra weight, e.g., by pressing down or kneeling on the child restraint while pulling up on the shoulder belt in order to force slack from the belt. This is necessary to remove the remaining slack that will exist once the extra weight of the child is added to the child restraint. It also helps to achieve the proper snugness of the child restraint to your vehicle. Sometimes, a slight lean toward the buckle will additionally help to remove remaining slack from the belt.
9. Attach the tether strap (if the child restraint is equipped). See **Using Tether Straps** later in this section.

E142534

10. Before placing the child in the seat, forcibly move the seat forward and back to make sure the seat is securely held in place. To check this, grab the seat at the belt path and attempt to move it side to side and forward and back. There should be no more than approximately 1 in (3 cm) of movement for proper installation.

Ford recommends checking with a NHTSA Certified Child Passenger Safety Technician (CPST) to make certain the child restraint is properly installed. In Canada, check with your local St. John Ambulance office for referral to a Certified Passenger Seat Technician.

Using Lower Anchors and Tethers for Children (LATCH)

WARNINGS

Do not attach two child safety restraints to the same anchor. In a crash, one anchor may not be strong enough to hold two child safety restraint attachments and may break, causing serious injury or death.

Depending on where you secure a child restraint, and depending on the child restraint design, you may block access to certain seatbelt buckle assemblies and LATCH lower anchors, rendering those features potentially unusable. To avoid risk of injury, make sure occupants only use seating positions where they are able to be properly restrained.

The LATCH system is composed of three vehicle anchor points: two lower anchors located where your vehicle seat back and seat cushion meet (called the seat bight) and one top tether anchor located behind that seating position.

LATCH compatible child safety restraints have two rigid or webbing mounted attachments that connect to the two lower anchors at the LATCH equipped seating positions in your vehicle. This type of attachment method eliminates the need to use seatbelts to attach the child restraint, however the seatbelt can still be used to attach the child restraint. For forward-facing child restraints, the top tether strap must also be attached to the proper top tether anchor, if a top tether strap has been provided with your child restraint.

2017 Fiesta (CCT) Canada/United States of America, HE8J 19A321 AB enUSA, Edition date: 201607, Second Printing

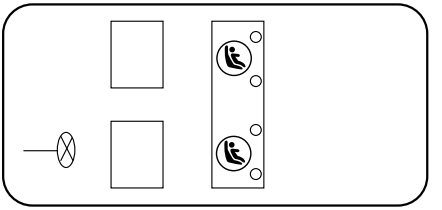

E142535

Your vehicle has LATCH lower anchors for child restraint installation at the seating positions marked with the child restraint symbol.

E144054

The LATCH anchors are located at the rear section of the rear seat between the cushion and seat back below the symbols as shown. Follow the child restraint manufacturer's instructions to properly install a child restraint with LATCH attachments. Follow the instructions on attaching child safety restraints with tether straps.

Attach LATCH lower attachments of the child restraint only to the anchors shown.

Use of Inboard Lower Anchors from the Outboard Seating Positions (Center Seating Use)

WARNING

The standardized spacing for LATCH lower anchors is 11 in (280 mm) center to center. Do not use LATCH lower anchors for the center seating position unless the child restraint manufacturer's instructions permit and specify using anchors spaced at least as far apart as those in this vehicle.

The lower anchors at the center of the second row rear seat are spaced 15 in (39 cm) apart. A child restraint with rigid LATCH attachments cannot be installed at the center seating position. LATCH compatible child restraints (with attachments on belt webbing) can only be used at this seating position provided that the child restraint manufacturer's instructions permit use with the anchor spacing stated. Do not attach a child restraint to any lower anchor if an adjacent child restraint is attached to that anchor.

Each time you use the safety restraint, check that the seat is properly attached to the lower anchors and tether anchor, if applicable. Tug the child restraint from side to side and forward and back where it is secured to your vehicle. The seat should move less than approximately 1 in (3 cm) when you do this for a proper installation.

If the safety restraint is not anchored properly, the risk of a child being injured in a crash greatly increases.

2017 Fiesta (CCT) Canada/United States of America, HE8J 19A321 AB enUSA, Edition date: 201607, Second Printing

Combining Seatbelt and LATCH Lower Anchors for Attaching Child Safety Restraints

When used in combination, either the seatbelt or the LATCH lower anchors may be attached first, provided a proper installation is achieved. Attach the tether strap afterward, if included with the child restraint.

Using Tether Straps

Many forward-facing child safety restraints include a tether strap which extends from the back of the child safety restraint and hooks to an anchoring point called the top tether anchor. Tether straps are available as an accessory for many older safety restraints.

Contact the manufacturer of your child restraint for information about ordering a tether strap, or to obtain a longer tether strap if the tether strap on your safety restraint does not reach the appropriate top tether anchor in your vehicle.

Once the child safety restraint has been installed using either the seatbelt, the lower anchors of the LATCH system, or both, you can attach the top tether strap.

The tether strap anchors in your vehicle are in the following positions (shown from top view):

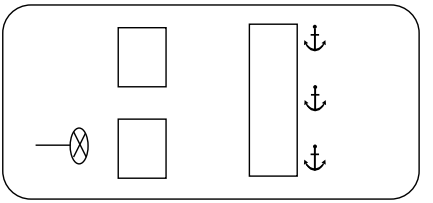

E142537

Perform the following steps to install a child safety restraint with tether anchors:

Note: *If you install a child restraint with rigid LATCH attachments, do not tighten the tether strap enough to lift the child restraint off your vehicle seat cushion when the child is seated in it. Keep the tether strap just snug without lifting the front of the child restraint. Keeping the child restraint just touching your vehicle seat gives the best protection in a severe crash.*

Four Door

The tether anchors in your vehicle are located under a cover marked with the tether anchor symbol.

1. Route the child safety restraint tether strap over the back of the seat. For outboard seating positions, route the tether strap under the head restraint and between the head restraint posts. For the center seating positions, route the tether strap over the top of the head restraint. If needed, the head restraints can also be removed.

E144274

2. Locate the correct anchor for the selected seating position, then open the tether anchor cover.

2017 Fiesta (CCT) Canada/United States of America, HE8J 19A321 AB enUSA, Edition date: 201607, Second Printing

E144275

3. Clip the tether strap to the anchor as shown.
4. Tighten the child safety restraint tether strap according to the manufacturer's instructions. If your child restraint system is equipped with a tether strap, and the child restraint manufacturer recommends its use, Ford also recommends its use.

Five Door

The tether anchors in your vehicle are located on the back panel of the rear seat. These are marked with the tether anchor symbol.

1. Route the child safety restraint tether strap over the back of the seat. For outboard seating positions, route the tether strap under the head restraint and between the head restraint posts. For the center seating positions, route the tether strap over the top of the head restraint. If needed, the head restraints can also be removed.

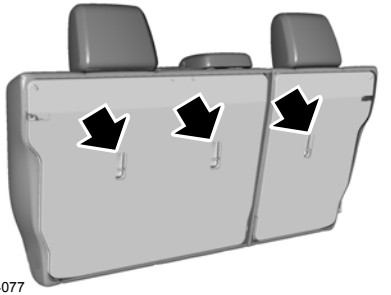

E164077

2. Locate the correct anchor on the back panel of the rear seat for the selected seating position.

E142539

3. Clip the tether strap to the anchor as shown.
4. Tighten the child safety restraint tether strap according to the manufacturer's instructions. If your child restraint system is equipped with a tether strap, and the child restraint manufacturer recommends its use, Ford also recommends its use.

BOOSTER SEATS

WARNING

Never place, or allow a child to place, the shoulder belt under a child's arm or behind the back because it reduces the protection for the upper part of the body and may increase the risk of injury or death in a crash.

Use a belt-positioning booster seat for children who have outgrown or no longer properly fit in a child safety seat (generally children who are less than 4 feet 9 inches (1.45 meters) tall, are greater than age four (4) and less than age twelve (12), and between 40 pounds (18 kilograms) and 80 pounds (36 kilograms) and upward to 100 pounds (45 kilograms) if

2017 Fiesta (CCT) Canada/United States of America, HE8J 19A321 AB enUSA, Edition date: 201607, Second Printing

recommended by your child restraint manufacturer). Many state and provincial laws require that children use approved booster seats until they reach age eight, a height of 4 feet 9 inches (1.45 meters) tall, or 80 pounds (36 kilograms).

Booster seats should be used until you can answer YES to ALL of these questions when seated without a booster seat:

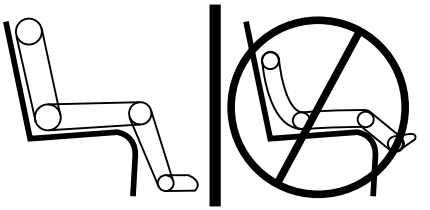

E142595

- Can the child sit all the way back against their vehicle seat back with knees bent comfortably at the edge of the seat cushion?
- Can the child sit without slouching?
- Does the lap belt rest low across the hips?
- Is the shoulder belt centered on the shoulder and chest?
- Can the child stay seated like this for the whole trip?

Always use booster seats in conjunction with your vehicle lap and shoulder belt.

Types of Booster Seats

E68924

- Backless booster seats

If your backless booster seat has a removable shield, remove the shield. If a vehicle seating position has a low seat back or no head restraint, a backless booster seat may place your child's head (as measured at the tops of the ears) above the top of the seat. In this case, move the backless booster to another seating position with a higher seat back or head restraint and lap and shoulder belts, or consider using a high back booster seat.

E70710

- High back booster seats

If, with a backless booster seat, you cannot find a seating position that adequately supports your child's head, a high back booster seat would be a better choice.

2017 Fiesta (CCT) Canada/United States of America, HE8J 19A321 AB enUSA, Edition date: 201607, Second Printing

Children and booster seats vary in size and shape. Choose a booster that keeps the lap belt low and snug across the hips, never up across the stomach, and lets you adjust the shoulder belt to cross the chest and rest snugly near the center of the shoulder. The following drawings compare the ideal fit (center) to a shoulder belt uncomfortably close to the neck and a shoulder belt that could slip off the shoulder. The drawings also show how the lap belt should be low and snug across the child's hips.

E142596

E142597

If the booster seat slides on the vehicle seat upon which it is being used, placing a rubberized mesh sold as shelf or carpet liner under the booster seat may improve this condition. Do not introduce any item thicker than this under the booster seat. Check with the booster seat manufacturer's instructions.

CHILD RESTRAINT POSITIONING

WARNINGS

Airbags can kill or injure a child in a child seat. Never place a rear-facing child seat in front of an active airbag. If you must use a forward-facing child seat in the front seat, move the vehicle seat upon which the child seat is installed all

2017 Fiesta (CCT) Canada/United States of America, HE8J 19A321 AB enUSA, Edition date: 201607, Second Printing

WARNINGS

the way back. When possible, all children age 12 and under should be properly restrained in a rear seating position. If all children cannot be seated and restrained properly in a rear seating position, properly restrain the largest child in the front seat.

Always carefully follow the instructions and warnings provided by the manufacturer of any child restraint to determine if the restraint device is appropriate for your child's size, height, weight, or age. Follow the child restraint manufacturer's instructions and warnings provided for installation and use in conjunction with the instructions and warnings provided by your vehicle manufacturer. A safety seat that is improperly installed or utilized, is inappropriate for your child's height, age, or weight or does not properly fit the child may increase the risk of serious injury or death.

WARNINGS

Never let a passenger hold a child on his or her lap while your vehicle is moving. The passenger cannot protect the child from injury in a crash, which may result in serious injury or death.

Never use pillows, books, or towels to boost a child. They can slide around and increase the likelihood of injury or death in a crash.

Always restrain an unoccupied child seat or booster seat. These objects may become projectiles in a crash or sudden stop, which may increase the risk of serious injury.

Never place, or allow a child to place, the shoulder belt under a child's arm or behind the back because it reduces the protection for the upper part of the body and may increase the risk of injury or death in a crash.

To avoid risk of injury, do not leave children or pets unattended in your vehicle.

2017 Fiesta (CCT) Canada/United States of America, HE8J 19A321 AB enUSA, Edition date: 201607, Second Printing

Recommendations for attaching child safety restraints for children

Restraint Type	Combined weight of child and child seat	Use any attachment method as indicated below by X				
		LATCH (lower anchors and top tether anchor)	LATCH (lower anchors only)	Safety belt and top tether anchor	Safety belt and LATCH (lower anchors and top tether anchor)	Safety belt only
Rear facing child seat	Up to 65 lb (29.5 kg)		X			X
Rear facing child seat	Over 65 lb (29.5 kg)					X
Forward facing child seat	Up to 65 lb (29.5 kg)	X		X	X	
Forward facing child seat	Over 65 lb (29.5 kg)			X	X	

Note: *The child seat must rest tightly against the vehicle seat upon which it is installed. It may be necessary to lift or remove the head restraint. See* ***Seats*** *(page 103).*

CHILD SAFETY LOCKS

WARNING

You cannot open the rear doors from inside if you have put the child safety locks on.

2017 Fiesta (CCT) Canada/United States of America, HE8J 19A321 AB enUSA, Edition date: 201607, Second Printing

Left-Hand Side

Turn counterclockwise to lock and clockwise to unlock.

Right-Hand Side

Turn clockwise to lock and counterclockwise to unlock.

2017 Fiesta (CCT) Canada/United States of America, HE8J 19A321 AB enUSA, Edition date: 201607, Second Printing

PRINCIPLE OF OPERATION

WARNINGS

Always drive and ride with your seatback upright and the lap belt snug and low across the hips.

To reduce the risk of injury, make sure children sit where they can be properly restrained.

Never let a passenger hold a child on his or her lap while your vehicle is moving. The passenger cannot protect the child from injury in a crash.

All occupants of your vehicle, including the driver, should always properly wear their safety belts, even when an airbag supplemental restraint system is provided. Failure to properly wear your safety belt could seriously increase the risk of injury or death.

It is extremely dangerous to ride in a cargo area, inside or outside of a vehicle. In a crash, people riding in these areas are more likely to be seriously injured or killed. Do not allow people to ride in any area of your vehicle that is not equipped with seats and safety belts. Be sure everyone in your vehicle is in a seat and using a safety belt properly.

In a rollover crash, an unbelted person is significantly more likely to die than a person wearing a safety belt.

Each seating position in your vehicle has a specific safety belt assembly which is made up of one buckle and one tongue that are designed to be used as a pair. 1) Use the shoulder belt on the outside shoulder only. Never wear the shoulder belt under the arm. 2) Never swing the safety belt around your neck over the inside shoulder. 3) Never use a single belt for more than one person.

WARNINGS

When possible, all children 12 years old and under should be properly restrained in a rear seating position. Failure to follow this could seriously increase the risk of injury or death.

Safety belts and seats can become hot in a vehicle that has been closed up in sunny weather; they could burn a small child. Check seat covers and buckles before you place a child anywhere near them.

Front and rear seat occupants, including pregnant women, should wear safety belts for optimum protection in an accident.

All seating positions in your vehicle have lap and shoulder safety belts. All occupants of the vehicle should always properly wear their safety belts, even when an airbag supplemental restraint system is provided.

The safety belt system consists of:

- Lap and shoulder safety belts.
- Shoulder safety belt with automatic locking mode, (except driver safety belt).
- Height adjuster at the front outboard seating positions.
- Safety belt pretensioner at the front outboard seating positions.
- Belt tension sensor at the front outboard passenger seating position.

· Safety belt warning light and chime.

· Crash sensors and monitoring system with readiness indicator.

2017 Fiesta (CCT) Canada/United States of America, HE8J 19A321 AB enUSA, Edition date: 201607, Second Printing

The safety belt pretensioners at the front seating positions are designed to tighten the safety belts when activated. In frontal and near-frontal crashes, the safety belt pretensioners may be activated alone or, if the crash is of sufficient severity, together with the front airbags. The pretensioners may also activate when a side curtain airbag is deployed.

FASTENING THE SEATBELTS

The front outermost and rear safety restraints in your vehicle are combination lap and shoulder belts.

E142587

1. Insert the seatbelt tongue into the proper buckle (the buckle closest to the direction the tongue is coming from) until you hear a snap and feel it latch.

Note: *Make sure that the seatbelt tongue is properly fastened in the seatbelt buckle.*

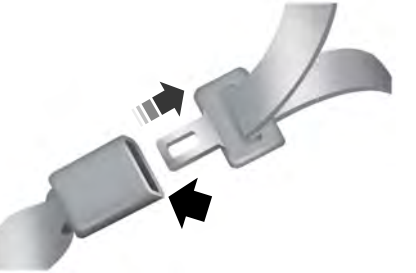

E142588

2. Press the button to release the seatbelt tongue.

E142589

When in use, the rear seatbelts should be placed in the belt guides on the outboard seatbacks.

Using Seatbelts During Pregnancy

WARNING

Always ride and drive with your seatback upright and properly fasten your seatbelt. Fit the lap portion of the seatbelt snugly and low across the hips. Position the shoulder portion of the seatbelt across your chest. Pregnant women must follow this practice. See the following figure.

2017 Fiesta (CCT) Canada/United States of America, HE8J 19A321 AB enUSA, Edition date: 201607, Second Printing

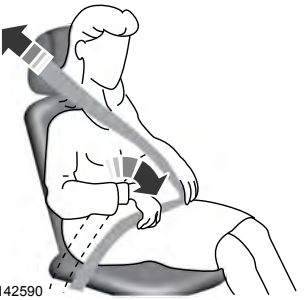

Pregnant women should always wear their seatbelt. The lap belt portion of a combination lap and shoulder belt should be positioned low across the hips below the belly and worn as tight as comfort allows. The shoulder belt should be positioned to cross the middle of the shoulder and the center of the chest.

Seatbelt Locking Modes

WARNINGS

After a crash, have a qualified technician check all the seatbelts to make sure the seatbelts including the automatic locking retractor feature for child restraints operate properly. We recommend replacing any system that has damage or does not operate properly. Failure to do so can result in personal injury or death in the event of a sudden stop or another crash.

You must replace the seatbelt if the automatic locking retractor or any other seatbelt function is not operating correctly. Failure to replace the seatbelt and retractor assembly could increase the risk of injury in a crash.

All safety restraints in the vehicle are combination lap and shoulder belts. The driver seatbelt has the first type of locking mode, and the front outboard passenger and rear seat seatbelts have both types of locking modes described as follows:

Vehicle Sensitive Mode

This is the normal retractor mode which allows free shoulder belt length adjustment to your movements and locking in response to vehicle movement. For example, if you brake suddenly or turn a corner sharply, or your vehicle receives an impact of approximately 5 mph (8 km/h) or more, the combination seatbelts lock to help reduce forward movement of the driver and passengers.

In addition, the retractor is designed to lock if you pull the webbing out too quickly. If the seatbelt retractor locks, slowly lower the height adjuster to allow the seatbelt to retract. If the retractor does not unlock, pull the seatbelt out slowly then feed a small length of webbing back toward the stowed position. For rear seatbelts, recline the rear seat backrest or push the seat backrest cushion away from the seatbelt. Feed a small length of webbing back toward the stowed position.

Automatic Locking Mode

In this mode, the shoulder belt automatically pre-locks. The seatbelt still retracts to remove any slack in the shoulder belt. The automatic locking mode is not available on the driver seatbelt.

Using Automatic Locking Mode

You should use automatic locking mode when a child safety seat, except a booster, is on the front passenger seat or rear seat. Children 12 years old and under should be correctly restrained in a rear seating position whenever possible. See **Child Safety** (page 16).

2017 Fiesta (CCT) Canada/United States of America, HE8J 19A321 AB enUSA, Edition date: 201607, Second Printing

E142591

1. Buckle the combination lap and shoulder belt.
2. Grasp the shoulder portion and pull downward until you pull the entire seatbelt out.
3. Let the seatbelt retract.

Note: *As the seatbelt retracts, you will hear a clicking sound. This indicates the seatbelt is now in the automatic locking mode.*

Disengaging Automatic Locking Mode

Unbuckle the combination lap and shoulder belt and allow it to retract completely to disengage the automatic locking mode and return the seatbelt to the vehicle sensitive mode.

SEATBELT HEIGHT ADJUSTMENT

WARNING

Position the seatbelt height adjuster so that the seatbelt rests across the middle of your shoulder. Failure to adjust the seatbelt correctly could reduce its effectiveness and increase the risk of injury in a crash.

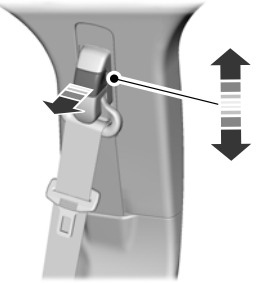
E145664

1. Pull the button and slide the height adjuster up or down.
2. Release the button and pull down on the height adjuster to make sure it is locked in place.

SEATBELT WARNING LAMP AND INDICATOR CHIME

This lamp illuminates and an audible warning will sound if the driver seatbelt has not been fastened when the vehicle's ignition is turned on.

2017 Fiesta (CCT) Canada/United States of America, HE8J 19A321 AB enUSA, Edition date: 201607, Second Printing

Conditions of operation

If	Then
The driver seatbelt is not buckled before the ignition switch is turned to the on position...	The seatbelt warning light illuminates and the warning chime sounds for a few seconds.
The driver seatbelt is buckled while the indicator light is illuminated and the warning chime is sounding...	The seatbelt warning light and warning chime turn off.
The driver seatbelt is buckled before the ignition switch is turned to the on position...	The seatbelt warning light and indicator chime remain off.

SEATBELT REMINDER

Belt-Minder™

This feature supplements the safety belt warning function by providing additional reminders that intermittently sound a tone and illuminate the safety belt warning light when you are in the driver seat or you have a front seat passenger and a safety belt is unbuckled.

The system uses information from the front passenger sensing system to determine if a front seat passenger is present and therefore potentially in need of a warning. To avoid the system turning on the Belt-Minder feature for objects you place on the front passenger seat, only the front seat passengers receive warnings as determined by the front passenger sensing system.

If the Belt-Minder warnings expire (warnings for about five minutes) for one passenger (driver or front passenger), the other passenger can still cause the Belt-Minder feature to turn on.

2017 Fiesta (CCT) Canada/United States of America, HE8J 19A321 AB enUSA, Edition date: 201607, Second Printing

If...	Then...
You and the front seat passenger buckle your safety belts before you switch the ignition on or less than 1–2 minutes elapse after you switch the ignition on...	The Belt-Minder feature will not activate.
You or the front seat passenger do not buckle your safety belts before your vehicle reaches at least 6 mph (9.7 km/h) and 1–2 minutes elapse after you switch the ignition on...	The Belt-Minder feature activates, the safety belt warning light illuminates and a warning tone sounds for 6 seconds every 25 seconds, repeating for about 5 minutes or until you and the front seat passenger buckle your safety belts.
The safety belt for the driver or front passenger is unbuckled for about 1 minute while the vehicle is traveling at least 6 mph (9.7 km/h) and more than 1–2 minutes elapse after you switch the ignition on...	The Belt-Minder feature activates, the safety belt warning light illuminates and a warning tone sounds for 6 seconds every 25 seconds, repeating for about 5 minutes or until you and the front seat passenger buckle your safety belts.

Deactivating and Activating the Belt-Minder Feature

WARNING

While the system allows you to switch this feature off, the intent of the system is to remind you to wear your safety belt to improve your chance to survive an accident. We recommend you leave the system switched on for yourself and others who may use the vehicle.

Note: *The driver and front passenger warnings switch on and off independently. When you perform this procedure for one seating position, do not buckle the other position as this will terminate the process.*

Read Steps 1–4 thoroughly before proceeding with the programming procedure.

Before following the procedure, make sure that:

- The parking brake is set.
- The transmission is in park (P) or neutral (N).
- The ignition is off.
- The driver and front passenger safety belts are unbuckled.

1. Switch the ignition on. Do not start the vehicle.
2. Wait until the safety belt warning light turns off (about 1 minute). After Step 2, wait an additional 5 seconds before proceeding with Step 3. Once you start Step 3, you must complete the procedure within 30 seconds.
3. For the seating position you are switching off, buckle then unbuckle the safety belt three times at a moderate speed, ending in the unbuckled state. After Step 3, the safety belt warning light turns on.

2017 Fiesta (CCT) Canada/United States of America, HE8J 19A321 AB enUSA, Edition date: 201607, Second Printing

4. While the safety belt warning light is on, buckle and then unbuckle the safety belt. After Step 4, the safety belt warning light flashes for confirmation.

- This will switch the feature off for that seating position if it is currently on.
- This will switch the feature on for that seating position if it is currently off.

CHILD RESTRAINT AND SEATBELT MAINTENANCE

Inspect the vehicle safety belts and child safety seat systems periodically to make sure they work properly and are not damaged. Inspect the vehicle and child seat safety belts to make sure there are no nicks, tears or cuts. Replace if necessary. All vehicle safety belt assemblies, including retractors, buckles, front safety belt buckle assemblies, buckle support assemblies (slide bar-if equipped), shoulder belt height adjusters (if equipped), shoulder belt guide on seat back (if equipped), child safety seat LATCH and tether anchors, and attaching hardware, should be inspected after a crash. Read the child restraint manufacturer's instructions for additional inspection and maintenance information specific to the child restraint.

Ford Motor Company recommends that all safety belt assemblies in use in vehicles involved in a crash be replaced. However, if the crash was minor and an authorized dealer finds that the belts do not show damage and continue to operate properly, they do not need to be replaced. Safety belt assemblies not in use during a crash should also be inspected and replaced if either damage or improper operation is noted.

Properly care for safety belts.

SEATBELT EXTENSION

WARNINGS

Persons who fit into the vehicle's seatbelt should not use an extension. Unnecessary use could result in serious personal injury in the event of a crash.

Only use extensions provided free of charge by Ford Motor Company dealers. The dealer will provide an extension designed specifically for this vehicle, model year and seating position. The use of an extension intended for another vehicle, model year or seating position may not offer you the full protection of your vehicle’s seatbelt restraint system.

Never use seatbelt extensions to install child restraints.

Do not use a seatbelt extension with an inflatable seatbelt.

Do not use extensions to change the fit of the belt across the torso, over the lap or to make the seatbelt buckle easier to reach.

If, because of body size or driving position, it is not possible to properly fasten the seatbelt over your lap and shoulder, an extension that is compatible with the seatbelts is available free of charge from Ford Motor Company dealers. Only Ford seatbelt extensions made by the original equipment seatbelts manufacturer should be used with Ford seatbelts. Ask your authorized dealer if your extension is compatible with your Ford vehicle restraint system.

2017 Fiesta (CCT) Canada/United States of America, HE8J 19A321 AB enUSA, Edition date: 201607, Second Printing

The Personal Safety System provides an improved overall level of frontal crash protection to front seat occupants and is designed to help further reduce the risk of airbag-related injuries. The system is able to analyze different occupant conditions and crash severity before activating the appropriate safety devices to help better protect a range of occupants in a variety of frontal crash situations.

The Vehicle Personal Safety System consists of:

- Driver and passenger dual-stage airbag supplemental restraints.
- Front seat outboard safety belts with pretensioners, energy management retractors and safety belt usage sensors.
- Driver seat position sensor.
- Front passenger sensing system.
- Passenger airbag off and on indicator lamp.
- Front crash severity sensors.
- Restraints control module with impact and safing sensors.
- Restraint system warning light and backup tone.
- The electrical wiring for the airbags, crash sensors, safety belt pretensioners, front safety belt usage sensors, driver seat position sensor, front passenger sensing system and indicator lights.

How Does the Personal Safety System Work?

The Personal Safety System can adapt the deployment strategy of the safety devices according to crash severity and occupant conditions. A collection of crash and occupant sensors provides information to the restraints control module. During a crash, the restraints control module may deploy the safety belt pretensioners, one or both stages of the dual-stage airbags based on crash severity and occupant conditions.

2017 Fiesta (CCT) Canada/United States of America, HE8J 19A321 AB enUSA, Edition date: 201607, Second Printing

PRINCIPLE OF OPERATION

WARNINGS

Airbags do not inflate slowly or gently, and the risk of injury from a deploying airbag is the greatest close to the trim covering the airbag module.

All occupants of your vehicle, including the driver, should always properly wear their seatbelts, even when an airbag supplemental restraint system is provided. Failure to properly wear your seatbelt could seriously increase the risk of injury or death.

Even with advanced restraints systems, properly restrain children 12 and under in a rear seating position. Failure to follow this could seriously increase the risk of injury or death.

Do not place your arms on the airbag cover or through the steering wheel. Failure to follow this instruction could result in personal injury.

Keep the areas in front of the airbags free from obstruction. Do not affix anything to or over the airbag covers. Objects could become projectiles during airbag deployment or in a sudden stop. Failure to follow this instruction could result in personal injury or death.

Airbags can kill or injure a child in a child restraint. Never place a rear-facing child restraint in front of an active airbag. If you must use a forward-facing child restraint in the front seat, move the seat upon which the child restraint is installed all the way back.

Do not attempt to service, repair, or modify the supplementary restraint system or associated components. Failure to follow this instruction could result in personal injury or death.

WARNINGS

Several airbag system components get hot after inflation. To reduce the risk of injury, do not touch them after inflation.

If a supplementary restraint system component has deployed, it will not function again. Have the system and associated components inspected as soon as possible. Failure to follow this instruction could result in personal injury or death.

The airbags are a supplemental restraint system and are designed to work with the seatbelts to help protect the driver and right front passenger from certain upper body injuries. Airbags do not inflate slowly; there is a risk of injury from a deploying airbag.

Note: *You will hear a loud bang and see a cloud of harmless powdery residue if an airbag deploys. This is normal.*

The airbags inflate and deflate rapidly upon activation. After airbag deployment, it is normal to notice a smoke-like, powdery residue or smell the burnt propellant. This may consist of cornstarch, talcum powder (to lubricate the bag) or sodium compounds (for example, baking soda) that result from the combustion process that inflates the airbag. Small amounts of sodium hydroxide may be present which may irritate the skin and eyes, but none of the residue is toxic.

While the system is designed to help reduce serious injuries, contact with a deploying airbag may also cause abrasions or swelling. Temporary hearing loss is also a possibility as a result of the noise associated with a deploying airbag. Because airbags must inflate rapidly and with considerable force, there is the risk of death or serious injuries such as fractures, facial and eye injuries or internal injuries,

2017 Fiesta (CCT) Canada/United States of America, HE8J 19A321 AB enUSA, Edition date: 201607, Second Printing

particularly to occupants who are not properly restrained or are otherwise out of position at the time of airbag deployment. Thus, it is extremely important that occupants be properly restrained as far away from the airbag module as possible while maintaining vehicle control.

Routine maintenance of the airbags is not required.

DRIVER AND PASSENGER AIRBAGS

WARNINGS

Do not place your arms on the airbag cover or through the steering wheel. Failure to follow this instruction could result in personal injury.

Keep the areas in front of the airbags free from obstruction. Do not affix anything to or over the airbag covers. Objects could become projectiles during airbag deployment or in a sudden stop. Failure to follow this instruction could result in personal injury or death.

Airbags can kill or injure a child in a child restraint. Never place a rear-facing child restraint in front of an active airbag. If you must use a forward-facing child restraint in the front seat, move the seat upon which the child restraint is installed all the way back.

E151127

The driver and front passenger airbags will deploy during significant frontal and near frontal crashes.

The driver and passenger front airbag system consists of:

- Driver and passenger airbag modules.
- Front passenger sensing system.

· Crash sensors and monitoring system with readiness indicator. See **Crash Sensors and Airbag Indicator** (page 45).

Proper Driver and Front Passenger Seating Adjustment

WARNING

National Highway Traffic Safety Administration (NHTSA) recommends a minimum distance of at least 10 in (25 cm) between an occupant's chest and the driver airbag module.

To properly position yourself away from the airbag:

- Move your seat to the rear as far as you can while still reaching the pedals comfortably.
- Recline the seat slightly (one or two degrees) from the upright position.

2017 Fiesta (CCT) Canada/United States of America, HE8J 19A321 AB enUSA, Edition date: 201607, Second Printing

After all occupants have adjusted their seats and put on seatbelts, it is very important that they continue to sit properly. A properly seated occupant sits upright, leaning against the seatback, and centered on the seat cushion, with their feet comfortably extended on the floor. Sitting improperly can increase the chance of injury in a crash event. For example, if an occupant slouches, lies down, turns sideways, sits forward, leans forward or sideways, or puts one or both feet up, the chance of injury during a crash is greatly increased.

Children and Airbags

WARNING

Airbags can kill or injure a child in a child restraint. Never place a rear-facing child restraint in front of an active airbag. If you must use a forward-facing child restraint in the front seat, move the seat upon which the child restraint is installed all the way back.

E142846

Children must always be properly restrained. Accident statistics suggest that children are safer when properly restrained in the rear seating positions than in the front seating position. Failure to follow these instructions may increase the risk of injury in a crash.

FRONT PASSENGER SENSING SYSTEM

WARNINGS

Even with Advanced Restraints Systems, children 12 and under should be properly restrained in a rear seating position. Failure to follow this could seriously increase the risk of injury or death.

Sitting improperly out of position or with the seatback reclined too far can take off weight from the seat cushion and affect the decision of the front passenger sensing system, resulting in serious injury or death in a crash. Always sit upright against your seatback, with your feet on the floor.

To reduce the risk of possible serious injury: Do not stow objects in the seatback map pocket or hang objects off a seatback if a child is in the front passenger seat. Do not place objects underneath the front passenger seat or between the seat and the center console. Check the passenger airbag off or pass airbag off indicator lamp for proper airbag status. Failure to follow these instructions may interfere with the front passenger seat sensing system.

Any alteration or modification to the front passenger seat may affect the performance of the front passenger sensing system which could seriously increase the risk of injury or death.

This system works with sensors that are part of the front passenger seat and safety belt to detect the presence of a properly-seated occupant and determine if the front passenger frontal airbag should be enabled (may inflate) or not.

2017 Fiesta (CCT) Canada/United States of America, HE8J 19A321 AB enUSA, Edition date: 201607, Second Printing

E157152

The front passenger sensing system uses a passenger airbag off indicator which will illuminate and stay lit to remind you that the front passenger frontal airbag is disabled.

The indicator lamp is located at the top center of the instrument panel.

Note: *When the ignition is first tuned on, the indicator lamp will illuminate for a short period of time to confirm it is functional.*

The front passenger sensing system is designed to disable (will not inflate) the front passenger frontal airbag when a rear facing infant seat, a forward-facing child restraint, or a booster seat is detected. Even with this technology, parents are **strongly** encouraged to always properly restrain children in the rear seat. The sensor also turns off the passenger front airbag and seat-mounted side airbag when the passenger seat is empty.

- When the front passenger sensing system disables (will not inflate) the front passenger frontal airbag, the indicator lamp will illuminate and stay lit to remind you that the front passenger frontal airbag is disabled.
- If the child restraint has been installed and the indicator lamp is not lit, then turn the vehicle off, remove the child restraint from the vehicle and reinstall the restraint following the child restraint manufacturer's instructions.

The front passenger sensing system is designed to enable (may inflate) the front passenger frontal airbag anytime the system senses that a person of adult size is sitting properly in the front passenger seat.

- When the front passenger sensing system enables the front passenger frontal airbag (may inflate), the indicator lamp will be unlit and stay unlit.

If a person of adult size is sitting in the front passenger seat, but the airbag off indicator lamp is lit, it is possible that the person is not sitting properly in the seat. If this happens:

- Turn the vehicle off and ask the person to place the seatback in the full upright position.
- Have the person sit upright in the seat, centered on the seat cushion, with the person's legs comfortably extended.
- Restart the vehicle and have the person remain in this position for about two minutes. This will allow the system to detect that person and enable the passenger frontal airbag.
- If the indicator lamp remains lit even after this, the person should be advised to ride in the rear seat.

2017 Fiesta (CCT) Canada/United States of America, HE8J 19A321 AB enUSA, Edition date: 201607, Second Printing

Occupant	Passenger airbag OFF indicator	Passenger airbag
Empty	Unlit	Disabled
Child	Lit	Disabled
Adult	Unlit	Enabled

Note: *When the passenger airbag off light is illuminated, the passenger (seat mounted) side airbag may be disabled to avoid the risk of airbag deployment injuries.*

After all occupants have adjusted their seats and put on safety belts, it is very important that they continue to sit properly. A properly seated occupant sits upright, leaning against the seatback, and centered on the seat cushion, with their feet comfortably extended on the floor. Sitting improperly can increase the chance of injury in a crash event. For example, if an occupant slouches, lies down, turns sideways, sits forward, leans forward or sideways, or puts one or both feet up, the chance of injury during a crash is greatly increased.

If you think that the status of the passenger airbag off indicator lamp is incorrect, check for the following:

- Objects lodged underneath the seat.
- Objects between the seat cushion and the center console.
- Objects hanging off the seatback.
- Objects stowed in the seatback map pocket.
- Objects placed on the occupant's lap.
- Cargo interference with the seat.
- Other passengers pushing or pulling on the seat.
- Rear passenger feet and knees resting or pushing on the seat.

The conditions listed above may cause the weight of a properly seated occupant to be incorrectly interpreted by the front passenger sensing system. The person in the front passenger seat may appear heavier or lighter due to the conditions described in the list above.

Make sure the front passenger sensing system is operating properly. See **Crash Sensors and Airbag Indicator** (page 45).

If the airbag readiness light is lit, do the following:

The driver and adult passengers should check for objects lodged underneath the front passenger seat, or cargo interfering with the seat.

If there are lodged objects, or cargo is interfering with the seat, take the following steps to remove the obstruction:

- Pull the vehicle over.
- Turn the vehicle off.
- Driver and adult passengers should check for any objects lodged underneath the front passenger seat or cargo interfering with the seat.
- Remove the obstruction(s) (if found).
- Restart the vehicle.

2017 Fiesta (CCT) Canada/United States of America, HE8J 19A321 AB enUSA, Edition date: 201607, Second Printing

- Wait at least two minutes and verify that the airbag readiness light is no longer illuminated.
- If the airbag readiness light remains illuminated, this may or may not be a problem due to the front passenger sensing system.

Do not attempt to repair or service the system. Take your vehicle immediately to an authorized dealer.

If it is necessary to modify an advanced front airbag system to accommodate a person with disabilities, contact the Ford Customer Relationship Center. See **Getting the Services You Need** (page 165).

SIDE AIRBAGS

WARNINGS

Do not place objects or mount equipment on or near the airbag cover, on the side of the seatbacks (of the front seats), or in front seat areas that may come into contact with a deploying airbag. Failure to follow these instructions may increase the risk of personal injury in the event of a crash.

Do not use accessory seat covers. The use of accessory seat covers may prevent the deployment of the side airbags and increase the risk of injury in an accident.

Do not lean your head on the door. The side airbag could injure you as it deploys from the side of the seatback.

Do not attempt to service, repair, or modify the airbag, its fuses or the seat cover on a seat containing an airbag as you could be seriously injured or killed. Contact your authorized dealer as soon as possible.

WARNINGS

If the side airbag has deployed, the airbag will not function again. The side airbag system (including the seat) must be inspected and serviced by an authorized dealer. If the airbag is not replaced, the unrepaired area will increase the risk of injury in a crash.

The side airbags are located on the outboard side of the seatbacks of the front seats. In certain sideways crashes, the airbag on the side affected by the crash will be inflated. The airbag was designed to inflate between the door panel and occupant to further enhance the protection provided occupants in side impact crashes.

E152533

The system consists of the following:

- A label or embossed side panel indicating that side airbags are fitted to your vehicle.
- Side airbags located inside the driver and front passenger seatbacks.
- Front passenger sensing system.

- Crash sensors and monitoring system with readiness indicator. See **Crash Sensors and Airbag Indicator** (page 45).

2017 Fiesta (CCT) Canada/United States of America, HE8J 19A321 AB enUSA, Edition date: 201607, Second Printing

Note: *The passenger sensing system will deactivate the passenger seat-mounted side airbag if it detects an empty passenger seat.*

The design and development of the side airbag system included recommended testing procedures that were developed by a group of automotive safety experts known as the Side Airbag Technical Working Group. These recommended testing procedures help reduce the risk of injuries related to the deployment of side airbags.

DRIVER KNEE AIRBAG

A driver's knee airbag is located under or within the instrument panel. During a crash, the restraints control module may activate the driver's knee airbag based on crash severity and occupant conditions. Under certain crash and occupant conditions, the driver's knee airbag may deploy but the driver's front airbag may not activate. As with front and side airbags, it is important to be properly seated and restrained to reduce the risk of death or serious injury.

Make sure the knee airbag is operating properly. See **Crash Sensors and Airbag Indicator** (page 45).

SIDE CURTAIN AIRBAGS

WARNINGS

Do not place objects or mount equipment on or near the headliner at the siderail that may come into contact with a deploying side curtain airbag. Failure to follow these instructions may increase the risk of personal injury in the event of a crash.

WARNINGS

Do not lean your head on the door. The side curtain airbag could injure you as it deploys from the headliner.

Do not attempt to service, repair, or modify the side curtain airbags, its fuses, the A, B, or C pillar trim, or the headliner on a vehicle containing side curtain airbags. Contact your authorized dealer as soon as possible.

All occupants of the vehicle including the driver should always wear their safety belts even when an airbag supplemental restraint system and side curtain airbag is provided. Failure to properly wear your safety belt could seriously increase the risk of injury or death.

To reduce risk of injury, do not obstruct or place objects in the deployment path of the side curtain airbag.

If the side curtain airbags have deployed, the side curtain airbags will not function again. The side curtain airbags (including the A, B and C pillar trim and headliner) must be inspected and serviced by an authorized dealer. If the side curtain airbag is not replaced, the unrepaired area will increase the risk of injury in a crash.

In certain sideways crashes, the side curtain airbag on the side affected by the crash will be inflated. The side curtain airbags are mounted to the roof side-rail sheet metal, behind the headliner, above each row of seats. The side curtain airbags are designed to inflate between the side window area and occupants to further enhance protection provided in side impact crashes.

The system consists of the following:

2017 Fiesta (CCT) Canada/United States of America, HE8J 19A321 AB enUSA, Edition date: 201607, Second Printing

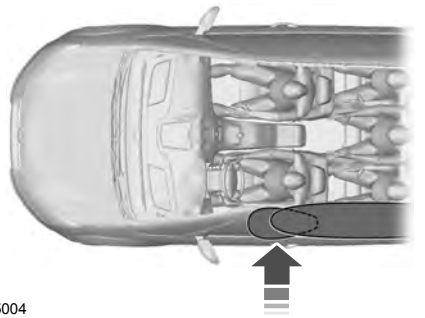

E75004

- Side curtain airbags located above the trim panels over the front and rear side windows identified by a label or wording on the headliner or roof-pillar trim.
- A flexible headliner which opens above the side doors to allow side air curtain deployment.

· Crash sensors and monitoring system with readiness indicator. See **Crash Sensors and Airbag Indicator** (page 45).

Children 12 years old and under should always be properly restrained in the back seats. The side curtain airbags will not interfere with children restrained using a properly installed child or booster seat because it is designed to inflate downward from the headliner above the doors along the side window opening.

The design and development of the side curtain airbags included recommended testing procedures that were developed by a group of automotive safety experts known as the Side Airbag Technical Working Group. These recommended testing procedures help reduce the risk of injuries related to the deployment of side curtain airbags.

SAFETY CANOPY™ - VEHICLES BUILT FROM: 06-03-2017

WARNINGS

Do not place objects or mount equipment on or near the headliner at the siderail that may come into contact with a deploying curtain airbag. Failure to follow these instructions may increase the risk of personal injury in the event of a crash.

Do not lean your head on the door. The curtain airbag could injure you as it deploys from the headliner.

Do not attempt to service, repair, or modify the supplementary restraint system or associated components. Failure to follow this instruction could result in personal injury or death.

All occupants of your vehicle, including the driver, should always properly wear their seatbelts, even when an airbag supplemental restraint system is provided. Failure to properly wear your seatbelt could seriously increase the risk of injury or death.

To reduce risk of injury, do not obstruct or place objects in the deployment path of the airbag.

If a supplementary restraint system component has deployed, it will not function again. Have the system and associated components inspected as soon as possible. Failure to follow this instruction could result in personal injury or death.

The Safety Canopy deploys during significant side crashes or when a certain likelihood of a rollover event is detected by the rollover sensor. The Safety Canopy is mounted to the roof side-rail sheet metal, behind the headliner, above each

2017 Fiesta (CCT) Canada/United States of America, HE8J 19A321 AB enUSA, Edition date: 201607, Second Printing

row of seats. In certain sideways crashes or rollover events, the Safety Canopy will be activated, regardless of which seats are occupied. The Safety Canopy is designed to inflate between the side window area and occupants to further enhance protection provided in side impact crashes and rollover events.

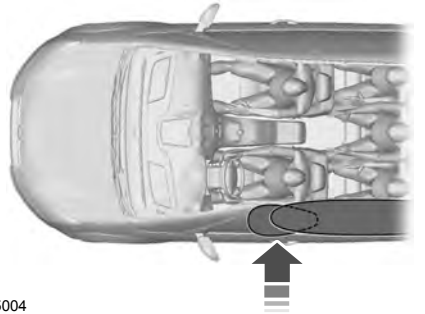

E75004

The system consists of the following:

- Safety Canopy curtain airbags above the trim panels over the front and rear side windows identified by a label or wording on the headliner or roof-pillar trim.
- A flexible headliner which opens above the side doors to allow air curtain deployment

· Crash sensors and monitoring system with a readiness indicator. See **Crash Sensors and Airbag Indicator** (page 45).

Properly restrain children 12 years old and under in the rear seats. The Safety Canopy will not interfere with children restrained using a properly installed child or booster seat because it is designed to inflate downward from the headliner above the doors along the side window opening.

The design and development of the Safety Canopy included recommended testing procedures that were developed by a group of automotive safety experts known as the Side Airbag Technical Working Group. These recommended testing procedures help reduce the risk of injuries related to the deployment of side airbags (including the Safety Canopy).

CRASH SENSORS AND AIRBAG INDICATOR

WARNING

Modifying or adding equipment to the front end of your vehicle (including hood, bumper system, frame, front end body structure, tow hooks and hood pins) may affect the performance of the airbag system, increasing the risk of injury. Do not modify or add equipment to the front end of your vehicle.

Your vehicle has a collection of crash and occupant sensors. These provide information to the restraints control module which could deploy the front safety belt pretensioners, driver airbag, driver knee airbag, passenger airbag, seat mounted side airbags, and the side curtain airbags. Based on the type of crash, frontal impact or side impact, the restraints control module will deploy the appropriate safety devices.

The restraints control module also monitors the readiness of the above safety devices plus the crash and occupant sensors. The readiness of the safety system is indicated by a warning lamp in the instrument cluster or by a backup tone if the warning lamp is not working. Routine maintenance of the airbag is not required.

A difficulty with the system is indicated by one or more of the following:

2017 Fiesta (CCT) Canada/United States of America, HE8J 19A321 AB enUSA, Edition date: 201607, Second Printing

The lamp will not illuminate immediately when you switch the ignition on.

- The lamp will either flash or remain on.
- A series of five beeps will be heard. The tone pattern will repeat periodically until the problem, the lamp or both are repaired.

If any of these things happen, even intermittently, have the supplemental restraint system checked by an authorized dealer immediately. Unless serviced, the system may not function correctly in the event of a crash.

The safety belt pretensioners and the front airbag supplemental restraint system are designed to deploy when your vehicle sustains longitudinal deceleration sufficient to cause the restraints control module to deploy a safety device.

The fact that the safety belt pretensioners or front airbags did not deploy for both front seat occupants in a crash does not mean that something is wrong with the system. It means the restraints control module determined that the crash conditions were not appropriate to deploy these safety devices.

- The design of the front airbags is to deploy only in frontal and near-frontal crashes (not rollovers, side impacts or rear impacts unless the crash causes sufficient longitudinal deceleration).
- The design of the safety belt pretensioners is to deploy in frontal and near-frontal crashes, and may also deploy when a side curtain airbag deploys.
- The knee airbag may deploy based on crash severity and occupant conditions.
- The design of the side airbags and side curtain airbags is to deploy in certain side impact crashes. These devices may deploy in other types of crashes if your vehicle experiences sufficient sideways motion or deformation.

AIRBAG DISPOSAL

Contact your authorized dealer as soon as possible. Airbags must be disposed of by qualified personnel.

2017 Fiesta (CCT) Canada/United States of America, HE8J 19A321 AB enUSA, Edition date: 201607, Second Printing

GENERAL INFORMATION ON RADIO FREQUENCIES

This device complies with Part 15 of the FCC Rules and with Industry Canada license-exempt RSS standard(s). Operation is subject to the following two conditions: (1) This device may not cause harmful interference, and (2) This device must accept any interference received, including interference that may cause undesired operation.

Note: *Changes or modifications not expressively approved by the party responsible for compliance could void the user's authority to operate the equipment. The term* ***IC*** *before the radio certification number only signifies that Industry Canada technical specifications were met.*

The typical operating range for your transmitter is approximately 33 ft (10 m). Vehicles with the remote start feature will have a greater range.

One of the following could cause a decrease in operating range:

- Weather conditions.
- Nearby radio towers.
- Structures around the vehicle.
- Other vehicles parked next to your vehicle.

The radio frequency used by your remote control can also be used by other radio transmitters, for example amateur radios, medical equipment, wireless headphones, wireless remote controls, cell phones, battery chargers and alarm systems. If the frequencies are jammed, you will not be able to use your remote control. You can lock and unlock the doors with the key.

Note: *Make sure to lock your vehicle before leaving it unattended.*

Note: *If you are in range, the remote control will operate if you press any button unintentionally.*

Note: *The remote control contains sensitive electrical components. Exposure to moisture or impact may cause permanent damage.*

Intelligent Access (If Equipped)

The system uses a radio frequency signal to communicate with your vehicle and authorize your vehicle to unlock when one of the following conditions are met:

- You activate the front exterior door handle switch.
- You press the luggage compartment button.
- You press a button on the transmitter.

If excessive radio frequency interference is present in the area or if the transmitter battery is low, you may need to mechanically unlock your door. You can use the mechanical key blade in your intelligent access key to open the driver door in this situation. See **Remote Control** (page 47).

REMOTE CONTROL

Integrated Keyhead Transmitter (If Equipped)

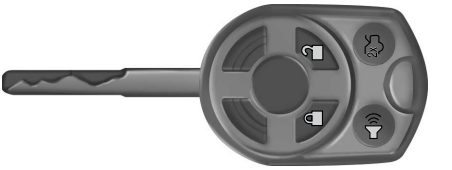

E142585

Use the key blade to start your vehicle and unlock or lock the driver door from outside your vehicle. The transmitter portion functions as the remote control.

2017 Fiesta (CCT) Canada/United States of America, HE8J 19A321 AB enUSA, Edition date: 201607, Second Printing

E162601

Note: *Your vehicle's keys came with a security label that provides important vehicle key cut information. Keep the label in a safe place for future reference.*

Intelligent Access Transmitter (If Equipped)

Your intelligent access keys operate the power locks. The key must be in your vehicle to activate the push button start system.

The intelligent access key also contains a removable mechanical key blade that you can use to unlock the driver door.

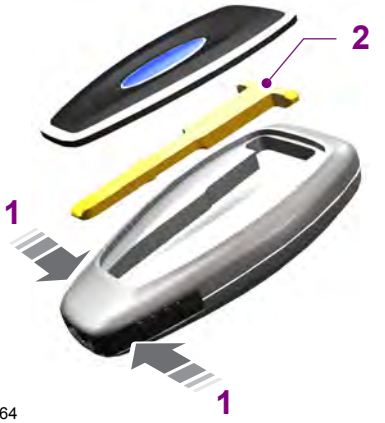

E87964

Note: *Your vehicle's back-up keys came with a security tag that provides important vehicle key cut information. Keep the tag in a safe place for future reference.*

Programming a New Integrated Keyhead Transmitter

1. Turn the ignition key from position **0** to position **II** 8 times within 10 seconds.
2. Turn the ignition key to position **0**. A tone sounds to indicate that it is now possible to program a remote control.
3. Press any button on a new remote control within 10 seconds. A tone sounds as confirmation.
4. Repeat step 3 within 10 seconds for each new remote control. Do not remove the key from the ignition when pressing the button on the remote control.
5. Turn the ignition key to position **II**, or wait for 10 seconds without programming another remote control to end the key programming. Only the remote controls that you have just programmed are now able to lock and unlock your vehicle.

Reprogramming the Unlocking Function

Note: *When you press the unlock button either all the doors are unlocked or only the driver's door and the liftgate are unlocked. Pressing the unlock button again unlocks all the doors.*

You can reprogram the unlocking function using the remote control so that only the driver's door is unlocked. This will enable two-stage unlocking.

Press and hold the unlock and lock buttons on the remote control simultaneously for at least four seconds with the ignition off. The direction indicators will flash twice to confirm the change.

2017 Fiesta (CCT) Canada/United States of America, HE8J 19A321 AB enUSA, Edition date: 201607, Second Printing

To return to the original unlocking function, repeat the process.

Replacing the Battery

Note: *Refer to local regulations when disposing of transmitter batteries.*

Note: *Do not wipe off any grease on the battery terminals or on the back surface of the circuit board.*

Note: *Replacing the battery will not delete the transmitter from the vehicle. The transmitter should operate normally.*

The remote control uses one coin-type three-volt lithium battery CR2032 or equivalent.

Vehicles Without Intelligent Access

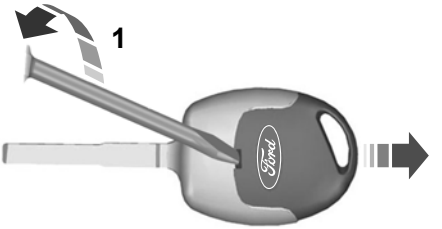

E126152

1. Insert a screwdriver into the recess on the back of the key and remove the key blade.

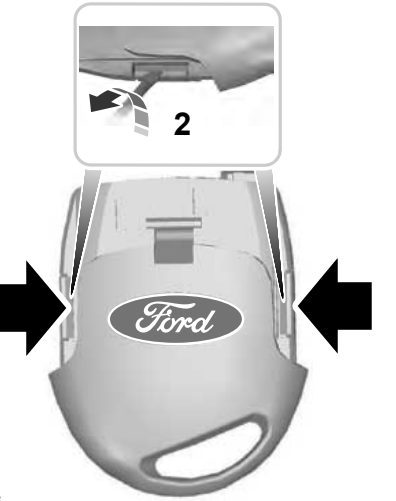

E126153

2. Release the retaining clips with the screwdriver and separate the two halves of the remote control.

E126281

Note: *Do not touch the battery contacts or the printed circuit board with the screwdriver.*

3. Carefully pry out the battery with the screwdriver.
4. Install a new battery (3V CR 2032) with the **+** facing upward.

2017 Fiesta (CCT) Canada/United States of America, HE8J 19A321 AB enUSA, Edition date: 201607, Second Printing

5. Assemble the two halves of the remote control.
6. Install the key blade.

Integrated Keyhead Transmitter

E138619

1. Twist a thin coin in the slot of the transmitter near the key ring to remove the battery cover.
2. Remove the old battery.

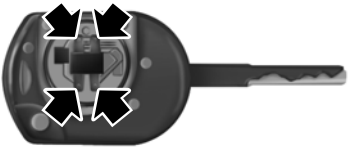

E138620

3. Insert the new battery. Refer to the instructions inside the transmitter for the correct orientation of the battery. Press the battery down to make sure it is fully in the housing.
4. Snap the battery cover back onto the transmitter.

Intelligent Access Transmitter

E87964

1. Press and hold the buttons on the edges to release the cover. Carefully remove the cover.
2. Remove the key blade.

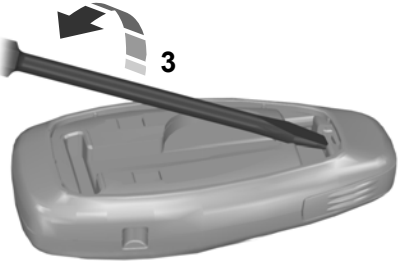

E105362

3. Twist the screwdriver in the position shown to start separating the two halves of the remote control.

2017 Fiesta (CCT) Canada/United States of America, HE8J 19A321 AB enUSA, Edition date: 201607, Second Printing

E119190

4. Twist the screwdriver in the position shown to separate the two halves of the remote control.

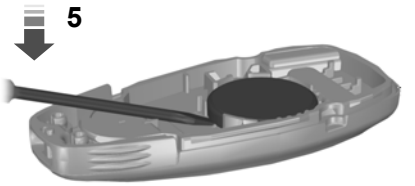

E125860

Note: *Do not touch the battery contacts or the printed circuit board with the screwdriver.*

5. Carefully remove the battery with the screwdriver.
6. Install a new battery (3V CR 2032) with the **+** facing downward.
7. Assemble the two halves of the remote control.
8. Install the key blade.

Car Finder

Press the button twice within three seconds. The horn will sound and the turn signals will flash. We recommend you use this method to locate your vehicle, rather than using the panic alarm.

Note: *If locking was not successful or if any door or the liftgate is open, or if the hood is open on vehicles with a perimeter alarm or remote start, the horn will sound twice and the lamps will not flash.*

Sounding a Panic Alarm (If Equipped)

Note: *The panic alarm will only operate when the ignition is off.*

Press the button to activate the alarm. Press the button again or turn the ignition on to deactivate.

REPLACING A LOST KEY OR REMOTE CONTROL

Replacement or additional keys or remote controls can be purchased from an authorized dealer. Your dealer can program the remote controls for your vehicle or you may be able to program them yourself. See **Remote Control** (page 47).

To re-program the passive anti-theft system see an authorized dealer.

2017 Fiesta (CCT) Canada/United States of America, HE8J 19A321 AB enUSA, Edition date: 201607, Second Printing

PRINCIPLE OF OPERATION

MyKey allows you to program keys with restricted driving modes to promote good driving habits. All but one of the keys programmed to the vehicle can be activated with these restricted modes.

Any keys that have not been programmed are referred to as administrator keys or admin keys. These can be used to:

- Create a MyKey.
- Program configurable MyKey settings.
- Clear all MyKey features.

When you have created a MyKey, you can access the following information using the information display:

- How many admin keys and MyKeys are programmed to your vehicle.
- The total distance your vehicle has traveled using any MyKey.

Note: *All MyKeys are programmed to the same settings. You cannot program them individually.*

Note: *For vehicles with keyless start, when both a MyKey transmitter and an admin transmitter are present, the admin transmitter will be recognized by the vehicle to start the engine.*

Non-configurable Settings

The following settings cannot be changed:

- Belt-Minder™. You cannot disable this feature. The audio system will mute when the driver and front seat passengers' safety belts are not fastened.
- Early low-fuel warning. The low-fuel warning activates earlier, giving the MyKey user more time to refuel.
- Driver assist features, if equipped on your vehicle, are forced on: parking aid.

Configurable Settings

You can configure certain MyKey settings when you first create a MyKey. You can also change the settings afterward with an admin key.

The following settings can be configured using an admin key:

- A vehicle speed limit can be set. Warnings will be shown in the display followed by an audible tone when your vehicle reaches the set speed. You cannot override the set speed by fully depressing the accelerator pedal or by setting the cruise control.

WARNING

Do not set MyKey maximum speed limit to a limit that will prevent the driver from maintaining a safe speed considering posted speed limits and prevailing road conditions. The driver is always responsible to drive in accordance with local laws and prevailing conditions. Failure to do so could result in accident or injury.

- Vehicle speed minders can be set. Once you select a speed, a visual warning will be shown in the display followed by an audible tone when the set vehicle speed is exceeded.
- Audio system maximum volume of 45%. A message will be shown in the display when you attempt to exceed the limited volume. Also, the speed sensitive compensated volume (automatic volume control) feature will be disabled.
- Always on setting. When this is selected you will not be able to disable AdvanceTrac, 911 Assist or the do not disturb feature (if your vehicle is equipped with these features).

2017 Fiesta (CCT) Canada/United States of America, HE8J 19A321 AB enUSA, Edition date: 201607, Second Printing

CREATING A MYKEY

Use the information display to create a MyKey:

1. Insert the key you want to program into the ignition. See **Keyless Starting** (page 112). If your vehicle is equipped with a push-button start, place the remote control into the backup position. See **Passive Anti-Theft System** (page 65).
2. Switch the ignition on.
3. Access the main menu on the information display controls. Use the arrow keys to get to the following menu selections:

Message	Action and Description
Settings	Press the **OK** button or the right arrow key.
MyKey	Press the **OK** button or the right arrow key.
Create MyKey	Press the **OK** button or the right arrow key.

When prompted, hold the **OK** button until you see a message informing you to label this key as a MyKey. The key will be restricted at the next start.

MyKey is successfully created. Make sure you label it so you can distinguish it from the admin keys.

You can also program configurable settings for the key(s). See **Programming/Changing Configurable Settings**.

Programming/Changing Configurable Settings

Use the information display to access your configurable MyKey settings.

1. Switch the ignition on using an admin key or remote control.
2. Access the main menu on the information display controls. Use the arrow keys to get to the following menu selections:

Message	Action and Description
Settings	Press the **OK** button or the right arrow key.
MyKey	Press the **OK** button or the right arrow key.

Note: *You can clear or change your MyKey settings at any time during the same key cycle as you created the MyKey. Once you have switched the vehicle off, however, you will need an admin key to change or clear your MyKey settings.*

CLEARING ALL MYKEYS

You can clear or change your MyKey settings using the information display control. See **Information Displays** (page 86).

2017 Fiesta (CCT) Canada/United States of America, HE8J 19A321 AB enUSA, Edition date: 201607, Second Printing

Switch the ignition on using an admin key or fob.

To clear all MyKeys of all MyKey settings, access the main menu and scroll to:

Message	Action and Description
Settings	Press the **OK** button.
MyKey	Press the **OK** button.
Clear MyKey	Press and hold the **OK** button until the following message displays.
All MyKeys Cleared	

Note: *When you clear your MyKeys, you remove all restrictions and return all MyKeys to their original admin key status.*

2017 Fiesta (CCT) Canada/United States of America, HE8J 19A321 AB enUSA, Edition date: 201607, Second Printing

CHECKING MYKEY SYSTEM STATUS

You can find information about your programmed MyKeys by using the information display. See **Information Displays** (page 86).

MyKey Distance

Tracks the distance when drivers use a MyKey. The only way to delete the accumulated distance is by using an admin key to clear all MyKeys. If the distance does not accumulate as expected, then the intended user is not using the MyKey, or an admin key user recently cleared and then recreated a MyKey.

Number of MyKeys

Indicates the number of MyKeys programmed to your vehicle. Use this feature to detect how many MyKeys you have for your vehicle and determine when all MyKeys have been deleted.

Number of Admin Keys

Indicates how many admin keys are programmed to your vehicle. Use this feature to determine how many admin keys you have for your vehicle, and detect if an additional MyKey has been programmed.

USING MYKEY WITH REMOTE START SYSTEMS

MyKey is not compatible with non-Ford-approved aftermarket remote start systems. If you choose to install a remote start system, please see an authorized dealer for a Ford-approved remote start system.

MYKEY TROUBLESHOOTING

Condition	Potential causes
I cannot create a MyKey.	· The key or transmitter used to start the vehicle does not have admin privileges. · The key or transmitter used to start the vehicle is the only admin key (there always has to be at least one admin key). · Vehicles with keyless start: The transmitter is not in the correct position. The position location is in another chapter. See **Keyless Starting** (page 112). · SecuriLock passive anti-theft system is disabled or in unlimited mode.
I cannot program the configurable settings.	· The key or transmitter used to start the vehicle does not have admin privileges.

2017 Fiesta (CCT) Canada/United States of America, HE8J 19A321 AB enUSA, Edition date: 201607, Second Printing

Condition	Potential causes
	· No MyKeys have been created. See **Creating a MyKey** (page 53).
I cannot clear the MyKeys.	· The key or transmitter used to start the vehicle does not have admin privileges. · No MyKeys are programmed to the vehicle. See **Creating a MyKey** (page 53).
I lost the only admin key.	Purchase a new key or transmitter from an authorized dealer, or program a spare key or transmitter. See **Passive Anti-Theft System** (page 65).
I lost a key.	Program a spare key or transmitter, or purchase a new key or transmitter. See **Passive Anti-Theft System** (page 65).
No MyKey functions with the keyless start transmitter.	· An admin key or transmitter is present at engine start-up. · No MyKeys are programmed to the vehicle. See **Creating a MyKey** (page 53).
MyKey distances do not accumulate.	· The MyKey user is not using a MyKey. · An admin key holder cleared the MyKeys and reset the key system.

2017 Fiesta (CCT) Canada/United States of America, HE8J 19A321 AB enUSA, Edition date: 201607, Second Printing

LOCKING AND UNLOCKING

Remote Control

Unlocking the Doors

Note: *The driver door can be unlocked with the key if the remote control is not functioning.*

Note: *When you lock your vehicle for several weeks, the remote control will be switched off. Your vehicle must be unlocked and the engine started using the key. Unlocking and starting your vehicle once will enable the remote control.*

One-Stage Unlocking

Press the button to unlock all doors.

The direction indicators will flash.

Two-Stage Unlocking

Press the button to unlock the driver door.

Press the button again within three seconds to unlock all doors.

The direction indicators will flash.

Reprogramming the Unlocking Function

You can reprogram the unlocking function using the remote control to change between one-stage and two-stage unlocking. See **Remote Control** (page 47).

Locking the Doors

Press the button to lock all the doors. The direction indicators will flash.

Press the button again within three seconds to confirm that all the doors are closed. The doors will lock again, the direction indicators will flash and the horn will sound, if all the doors and the luggage compartment are closed.

Note: *If any door, the hood or the luggage compartment is open on vehicles that have an anti-theft alarm or remote start, the direction indicators will not flash but the horn will sound.*

Automatic Re-locking

The doors will relock automatically if you do not open a door within 45 seconds of unlocking the doors with the remote control. The door locks and the alarm will return to their previous state.

Locking and Unlocking the Doors From Inside

The power door lock control is located on the instrument panel near the radio.

Press the button to lock and unlock all the doors. The lamp illuminates with the doors locked.

Locking and Unlocking the Doors With the Key

Note: *Do not leave your keys in your vehicle.*

Locking With the Key

Turn the top of the key toward the front of your vehicle.

Unlocking With the Key

Turn the top of the key toward the rear of your vehicle to unlock the driver door. Turn the key again within a few seconds to unlock the remaining doors.

2017 Fiesta (CCT) Canada/United States of America, HE8J 19A321 AB enUSA, Edition date: 201607, Second Printing

Unlocking the Doors With the Interior Door Handles

You can unlock individual doors by pulling the relevant interior door handle. Pulling the driver interior door handle will unlock all the doors, if auto unlock has been enabled.

Rear Door Unlocking and Opening

Pull the interior door release handle twice to unlock and open the rear door. The first pull unlocks the door and the second pull will unlatch the door.

Smart Unlocks for Integrated Keyhead Transmitter

This feature helps to prevent you from locking yourself out of your vehicle if your key is still in the ignition.

When you open one of the front doors and lock your vehicle with the power door lock control, all the doors will lock then unlock if your key is still in the ignition.

You can still lock your vehicle with the key in the ignition by pressing the lock button on the transmitter even if the doors are not closed.

If both front doors are closed, you can lock your vehicle by any method, regardless of whether the key is in the ignition or not.

Smart Unlocks for Intelligent Access Keys (If Equipped)

This feature helps to prevent you from locking yourself out of your vehicle if your key is still in your vehicle.

When you lock your vehicle using the power door lock control (with the door open, vehicle in park (P) and ignition off), your vehicle will search for an intelligent access key in the passenger compartment after you close the door. If your vehicle finds a key, all of the doors will immediately unlock and the horn will sound, indicating that a key is inside.

In order to override the smart unlock feature and intentionally lock the intelligent access key inside your vehicle, you can lock your vehicle after all doors are closed by pressing the lock button on another intelligent access key or touching the locking area on the handle with another intelligent access key in your hand.

When you open one of the front doors and lock your vehicle using the power door lock control, all doors will lock then unlock if:

- The ignition is on.
- The ignition is off and the transmission is not in park (P).

Auto Lock Feature

The auto lock feature will lock the doors and liftgate when all of the following conditions have been met:

- All doors are closed.
- The ignition is on.
- Your vehicle is moving at a speed greater than 12 mph (20 km/h) for more than two seconds.

2017 Fiesta (CCT) Canada/United States of America, HE8J 19A321 AB enUSA, Edition date: 201607, Second Printing

Auto Unlock Feature

The auto unlock feature will unlock all the doors when all of the following conditions have been met:

- The ignition is on, all doors are closed, and your vehicle is moving at a speed greater than 12 mph (20 km/h) for more than two seconds.
- Your vehicle has come to a stop and you switch the ignition off or to the accessory position.
- The driver door is opened within 10 minutes of you switching the ignition off or to the accessory position.

Note: *The doors will not auto unlock if your vehicle has been electronically locked after the ignition is switched off and before the driver door is opened.*

Enabling or Disabling Auto Unlock

Note: *See an authorized dealer to enable or disable the auto unlock feature or carry out the following procedure.*

Note: *You will have 30 seconds to complete the procedure.*

1. Switch the ignition on.
2. Press the power door lock button three times.
3. Switch the ignition off.
4. Press the power door lock button three times.
5. Switch the ignition on. The system alerts you with a tone to indicate your vehicle is in programming mode.
6. Press the power door lock button for less than one second and release.

A tone sounds to confirm the change.

After programming the feature, switch the ignition off to exit the programming mode.

Emergency Locking With the Key

Note: *If the child safety locks are on and you pull the interior handle, you will only turn off the emergency locking, not the child safety lock. You can only open the doors using the external door handle.*

Note: *If the doors have been unlocked using this method, the doors must be locked individually until the central locking function has been repaired.*

Note: *When the central locking function fails to operate, lock the doors individually using the key in the position shown.*

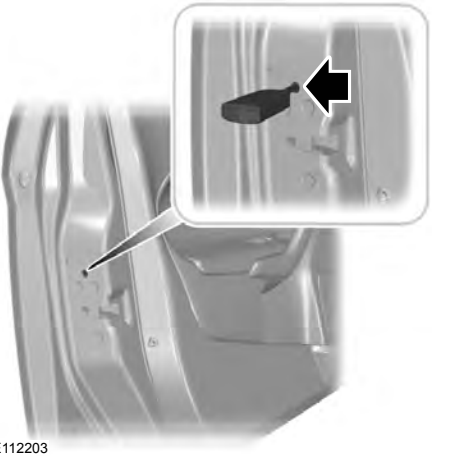

E112203

Left-Hand Side

Turn clockwise to lock.

Right-Hand Side

Turn counterclockwise to lock.

2017 Fiesta (CCT) Canada/United States of America, HE8J 19A321 AB enUSA, Edition date: 201607, Second Printing

MANUAL LIFTGATE

WARNINGS

It is extremely dangerous to ride in a cargo area, inside or outside of a vehicle. In a crash, people riding in these areas are more likely to be seriously injured or killed. Do not allow people to ride in any area of your vehicle that is not equipped with seats and seatbelts. Make sure everyone in your vehicle is in a seat and properly using a seatbelt. Failure to follow this warning could result in serious personal injury or death.

Make sure to close and latch the liftgate to prevent drawing exhaust fumes into your vehicle. This will also prevent passengers and cargo from falling out. If you must drive with the liftgate open, keep the vents or windows open so outside air comes into your vehicle. Failure to follow this warning could result in serious personal injury.

Note: *Be careful when opening or closing the liftgate in a garage or other enclosed area to avoid damaging the liftgate.*

Note: *Do not hang anything, for example a bike rack, from the glass or liftgate. This could damage the liftgate and its components.*

Note: *Do not leave the liftgate open when you are driving. This could damage the liftgate and its components.*

Opening and Closing the Liftgate

To Open the Liftgate

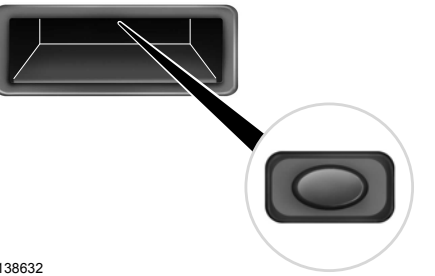

E138632

Press the button located in the top of the liftgate pull cup handle to unlatch the liftgate, then pull on the outside handle.

Opening With the Remote Control

Press the button twice within three seconds.

To Close the Liftgate

E89132

A handle is inside the liftgate to help with closing.

2017 Fiesta (CCT) Canada/United States of America, HE8J 19A321 AB enUSA, Edition date: 201607, Second Printing

KEYLESS ENTRY

General Information

WARNING

The system may not function if the key is close to metal objects or electronic devices such as cell phones.

The system will not function if:

- Your vehicle battery has no charge.
- The passive key frequencies are jammed.
- The passive key battery has no charge.

Note: *If the system does not function, you will need to use the key blade to lock and unlock your vehicle.*

The system allows you to operate your vehicle without the use of a key or remote control.

E78276

Passive locking and unlocking requires a valid passive key to be located within one of the three external detection ranges. These are located approximately 5 ft (1.5 m) from the front door handles and the luggage compartment.

Passive Key

Your vehicle can be locked and unlocked with the passive key. You can use the passive key as a remote control. See **Locking and Unlocking** (page 57).

Locking Your Vehicle

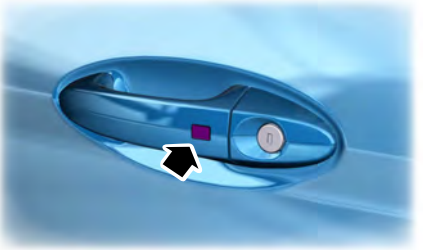

E87384

WARNING

Your vehicle does not lock itself automatically. If you do not press a locking button your vehicle will remain unlocked.

Locking buttons are located on each of the front doors.

For central locking and to arm the alarm, press a locking button once.

Note: *Your vehicle will remain locked for approximately three seconds. When the delay period is over, you can open the doors again, provided the passive key is within the respective detection range.*

When you lock your vehicle, the direction indicators will flash to confirm your vehicle has locked and the alarm is armed.

Luggage Compartment

Note: *The luggage compartment cannot be closed and will pop back up with a warning chime if the passive key is located inside the vehicle with the doors locked.*

2017 Fiesta (CCT) Canada/United States of America, HE8J 19A321 AB enUSA, Edition date: 201607, Second Printing

Note: *If a second valid passive key is located within the luggage compartment detection range, the luggage compartment can be closed.*

Unlocking Your Vehicle

Note: *When your vehicle remains locked for longer than three days, the system will enter an energy-saving mode. This is to prevent your vehicle battery running out of charge. When your vehicle is unlocked while in this mode, the reaction time of the system may be a little longer than normal. To exit the energy-saving mode, unlock your vehicle.*

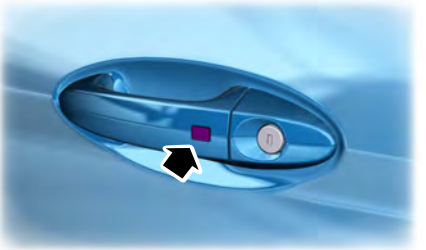

E87384

Press a locking button once.

Note: *A valid passive key must be located within the detection range of that door.*

When you unlock your vehicle, the direction indicators will flash to confirm your vehicle has unlocked and the alarm has disarmed.

Unlocking Only the Driver Door

You can program the system so that only the driver door is unlocked. See **Remote Control** (page 47).

If the unlocking function is reprogrammed so that only the driver door and the luggage compartment are unlocked the following will occur:

- If the driver door is the first door opened, all the other doors will remain locked. All the other doors can be unlocked from inside your vehicle by pressing the unlock button on the instrument panel.

Disabled Keys

Any keys left inside your vehicle interior when it is locked will be disabled.

You cannot use a disabled key to switch the ignition on or start the engine.

You must enable all passive keys again in order to use them.

To enable all your passive keys, unlock your vehicle using a passive key or the remote control unlocking function.

All passive keys will then be enabled if you switch the ignition on or you start your vehicle with a valid key.

2017 Fiesta (CCT) Canada/United States of America, HE8J 19A321 AB enUSA, Edition date: 201607, Second Printing

Locking and Unlocking the Doors With the Key Blade

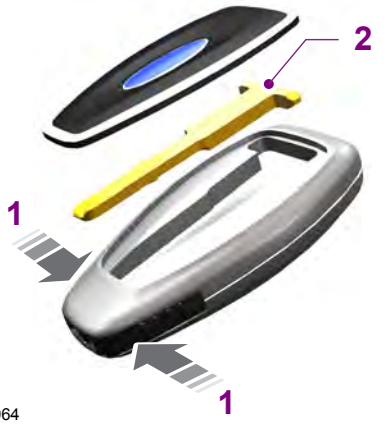

E87964

1. Carefully remove the cover.
2. Remove the key blade and insert it into the lock.

Note: *Only the driver door handle has a lock cylinder.*

INTERIOR LUGGAGE COMPARTMENT RELEASE (If Equipped)

WARNINGS

Keep vehicle doors and luggage compartment locked and keep keys and remote transmitters out of a child's reach. Unsupervised children could lock themselves in the trunk and risk injury. Children should be taught not to play in vehicles.

WARNINGS

Do not leave children or animals unattended in the vehicle. On hot days, the temperature in the trunk or vehicle interior can rise very quickly. Exposure of people or animals to these high temperatures for even a short time can cause death or serious heat-related injuries, including brain damage. Small children are particularly at risk.

Your vehicle is equipped with a release handle that provides a means of escape for children and adults if they become locked inside the luggage compartment.

Adults should familiarize themselves with the operation and location of the release handle.

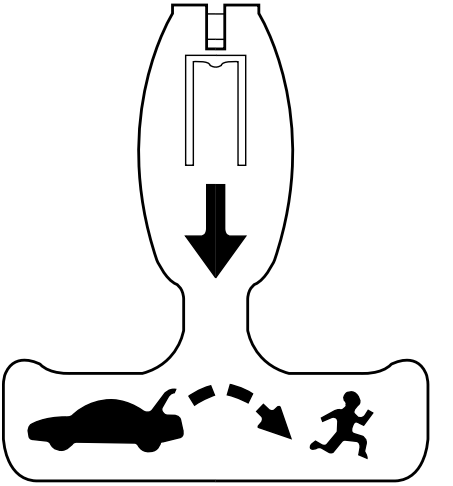

E144403

2017 Fiesta (CCT) Canada/United States of America, HE8J 19A321 AB enUSA, Edition date: 201607, Second Printing

The handle is located inside the luggage compartment either on the luggage compartment door (lid) or near the tail lamps. It is composed of a material that will glow for hours in darkness following brief exposure to ambient light.

Pull the handle and push up on the luggage compartment door (lid) to open from within the luggage compartment.

2017 Fiesta (CCT) Canada/United States of America, HE8J 19A321 AB enUSA, Edition date: 201607, Second Printing

PASSIVE ANTI-THEFT SYSTEM

Note: *The system is not compatible with non-Ford aftermarket remote start systems. Use of these systems may result in vehicle starting problems and a loss of security protection.*

Note: *Metallic objects, electronic devices or a second coded key on the same key chain may cause vehicle starting problems if they are too close to the key when starting the engine. Prevent these objects from touching the coded key while starting the engine. Switch the ignition off, move all objects on the key chain away from the coded key and restart the engine if a problem occurs.*

Note: *Do not leave a duplicate coded key in the vehicle. Always take your keys and lock all doors when leaving the vehicle.*

SecuriLock®

The system is an engine immobilization system. It is designed to help prevent the engine from being started unless a coded key programmed to your vehicle is used. Using the wrong key may prevent the engine from starting. A message may appear in the information display.

If you are unable to start the engine with a correctly coded key, a malfunction has happened and a message may appear in the information display.

Automatic Arming

The vehicle arms immediately after you switch the ignition off.

Automatic Disarming

Switching the ignition on with a coded key disarms the vehicle.

Replacement Keys

Note: *Your vehicle comes equipped with two integrated keyhead transmitters or two intelligent access keys.*

The integrated keyhead transmitter functions as a programmed ignition key that operates all the locks and starts the vehicle, as well as a remote control.

The intelligent access key functions as a programmed key that operates the driver door lock and activates the intelligent access with push button start system, as well as a remote control.

If your programmed transmitters or standard SecuriLock coded keys (integrated keyhead transmitters only) are lost or stolen and you do not have an extra coded key, you will need to have your vehicle towed to an authorized dealer. You need to erase the key codes from your vehicle and program new coded keys.

Store an extra programmed key away from the vehicle in a safe place to help prevent any inconveniences. See your authorized dealer to purchase additional spare or replacement keys.

Programming a Spare Integrated Keyhead Transmitter

Note: *You can program a maximum of eight coded keys to your vehicle. All eight can be integrated keyhead transmitters.*

You can program your own integrated keyhead transmitter or standard SecuriLock coded keys to your vehicle. This procedure only programs the engine immobilizer keycode to your vehicle.

Note: *You can also program the remote entry portion of the integrated keyhead transmitter to your vehicle. See* ***Remote Control*** *(page 47).*

Only use integrated keyhead transmitters or standard SecuriLock keys.

2017 Fiesta (CCT) Canada/United States of America, HE8J 19A321 AB enUSA, Edition date: 201607, Second Printing

You must have two previously programmed coded keys and the new unprogrammed key readily accessible. See your authorized dealer to have the spare key programmed if two previously programmed coded keys are not available.

Read and understand the entire procedure before you begin.

1. Insert the first previously programmed coded key into the ignition.
2. Switch the ignition from off to on. Keep the ignition on for at least three seconds, but no more than 10 seconds.
3. Switch the ignition off and remove the first coded key from the ignition.
4. After three seconds but within 10 seconds of switching the ignition off, insert the second previously coded key into the ignition.
5. Switch the ignition from off to on. Keep the ignition on for at least three seconds, but no more than 10 seconds.
6. Switch the ignition off and remove the second previously programmed coded key from the ignition.
7. After three seconds but within 10 seconds of switching the ignition off and removing the previously programmed coded key, insert the new unprogrammed key into the ignition.
8. Switch the ignition from off to on. Keep the ignition on for at least six seconds.
9. Remove the newly programmed coded key from the ignition.

If the key has been successfully programmed it will start the engine and operate the remote entry system (if the new key is an integrated keyhead transmitter).

If programming was not successful, wait 10 seconds and repeat Steps 1 through 8. If you are still unsuccessful, take your vehicle to your authorized dealer.

Programming a Spare Intelligent Access Key

See your authorized dealer to have additional keys programmed to your vehicle.

ANTI-THEFT ALARM

Alarm System

The perimeter alarm is a deterrent against unauthorized access to your vehicle through the doors and the hood. It also protects the audio unit.

Triggering the Alarm

Once armed, the alarm is triggered in any of the following ways:

- If someone opens a door, the liftgate or the hood without a valid key or remote control.
- If someone removes the audio or navigation system.
- If you switch the ignition on without a valid key.

If the alarm is triggered, the alarm horn will sound for 30 seconds and the hazard warning flasher will flash for five minutes.

Any further attempts to perform one of the above will trigger the alarm again.

Arming the Alarm

To arm the alarm, lock your vehicle. See **Doors and Locks** (page 57).

Disarming the Alarm

Vehicles Without Keyless Entry

Disarm and silence the alarm by unlocking the doors with the key and switching the ignition on with a correctly coded key or unlocking the doors with the remote control.

2017 Fiesta (CCT) Canada/United States of America, HE8J 19A321 AB enUSA, Edition date: 201607, Second Printing

Vehicles with Keyless Entry

Note: *A valid passive key must be located within the detection range of that door for keyless entry. See* ***Keyless Entry*** *(page 61).*

Disarm and silence the alarm by unlocking the doors and switching the ignition on or unlocking the doors with the remote control.

2017 Fiesta (CCT) Canada/United States of America, HE8J 19A321 AB enUSA, Edition date: 201607, Second Printing

ADJUSTING THE STEERING WHEEL

WARNING

Do not adjust the steering wheel when your vehicle is moving.

Note: *Make sure that you are sitting in the correct position. See* ***Sitting in the Correct Position*** *(page 103).*

E95178

1. Unlock the steering column.
2. Adjust the steering wheel to the desired position.

E95179

3. Lock the steering column.

AUDIO CONTROL (If Equipped)

Select the required source on the audio unit.

2017 Fiesta (CCT) Canada/United States of America, HE8J 19A321 AB enUSA, Edition date: 201607, Second Printing

You can operate the following functions with the control:

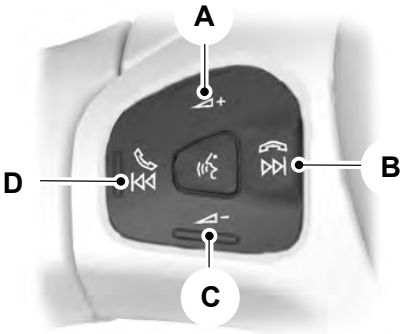

E141530

A	Volume up
B	Seek up, next or end call
C	Volume down
D	Seek down, previous or accept call

Seek, Next or Previous

Press the seek button to:

- tune the radio to the next or previous stored preset
- play the next or the previous track.

Press and hold the seek button to:

- tune the radio to the next station up or down the frequency band
- seek through a track.

VOICE CONTROL (If Equipped)

E141533

Press the button to select or deselect voice control. See **SYNC™** (page 276).

CRUISE CONTROL (If Equipped)

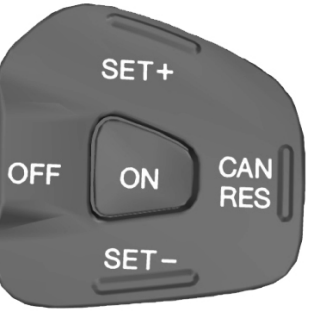

E141961

See **Cruise Control** (page 144).

2017 Fiesta (CCT) Canada/United States of America, HE8J 19A321 AB enUSA, Edition date: 201607, Second Printing

WINDSHIELD WIPERS

Note: *Fully defrost the windshield before you switch the windshield wipers on.*

Note: *Make sure you switch the windshield wipers off before entering a car wash.*

Note: *If you use a car wash with a waxing cycle, make sure that you remove the wax from the windshield and the wiper blades.*

Note: *If streaks or smears appear on the windshield, clean the windshield and the wiper blades. See* ***Checking the Wiper Blades*** *(page 194).*

If that does not resolve the issue, install new wiper blades. See ***Changing the Front Wiper Blades*** *(page 195).*
Note: *Do not operate the wipers on a dry windshield. This may scratch the glass, damage the wiper blades or cause the wiper motor to burn out. Always use the windshield washers before wiping a dry windshield.*

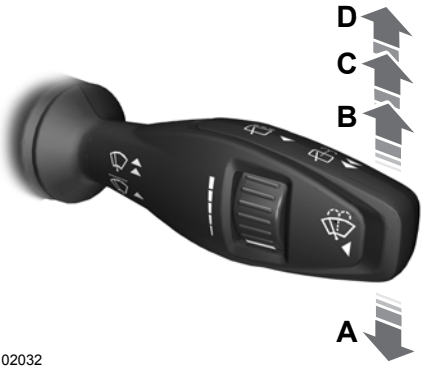

E102032

A	Single wipe
B	Intermittent wipe
C	Normal wipe
D	High speed wipe

Note: *If you press and hold the wiper lever in position A, the wipers will continue to wipe until you release the wiper lever.*

Intermittent Wipe

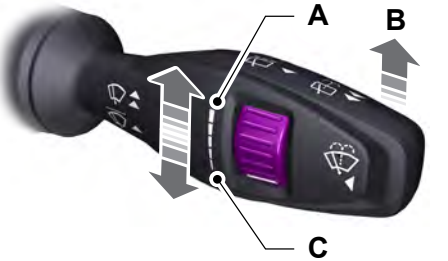

E102033

A	Short wipe interval
B	Intermittent wipe
C	Long wipe interval

Use the rotary control to adjust the intermittent wipe interval.

Speed Dependent Wipers (If Equipped)

When your vehicle speed increases, the interval between wipes decreases.

WINDSHIELD WASHERS

Note: *Do not operate the washers when the washer reservoir is empty. This may cause the washer pump to overheat.*

E102051

2017 Fiesta (CCT) Canada/United States of America, HE8J 19A321 AB enUSA, Edition date: 201607, Second Printing

Push the button to operate the washers. When you release the button, the wipers will operate for a short time.

REAR WINDOW WIPER AND WASHERS

Intermittent Wipe

E102052

Pull the lever toward you.

Reverse Gear Wipe

The rear wiper will turn on automatically when selecting reverse gear if:

- the rear wiper is not already switched on
- the wiper lever is in position A, B, C or D
- the front wiper is operating (when set to position B).

Rear Window Washer

Note: *Do not operate the washers when the washer reservoir is empty. This may cause the washer pump to overheat.*

E102053

Pull the lever toward you to operate the washers. They will operate for a maximum of 10 seconds. When you release the lever, the wiper will operate for a short time.

2017 Fiesta (CCT) Canada/United States of America, HE8J 19A321 AB enUSA, Edition date: 201607, Second Printing

GENERAL INFORMATION

Condensation in the Exterior Front Lamps and Rear Lamps

Exterior front lamps and rear lamps have vents to accommodate normal changes in air pressure.

Condensation can be a natural by-product of this design. When moist air enters the lamp assembly through the vents, there is a possibility that condensation can occur when the temperature is cold. When normal condensation occurs, a fine mist can form on the interior of the lens. The fine mist eventually clears and exits through the vents during normal operation.

Clearing time may take as long as 48 hours under dry weather conditions.

Examples of acceptable condensation are:

- The presence of a fine mist (no streaks, drip marks or large droplets).
- A fine mist covers less than 50% of the lens.

Examples of unacceptable condensation are:

- A water puddle inside the lamp.
- Streaks, drip marks or large droplets present on the interior of the lens.

If you see any unacceptable condensation, have your vehicle checked by an authorized dealer.

LIGHTING CONTROL

Lighting Control Positions

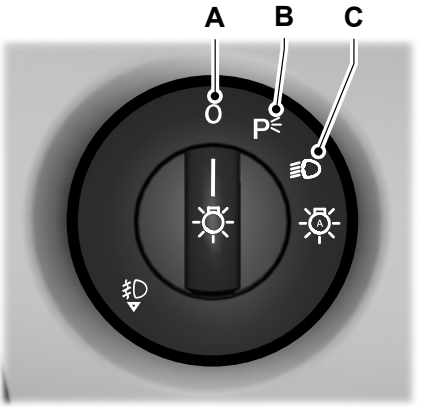

E156651

A	Off
B	Parking lamps, instrument panel lamps, license plate lamps and tail lamps
C	Headlamps

Parking Lamps

Note: *Prolonged use of the parking lamps when the ignition is off will cause the battery to run out of charge.*

To operate the parking lamps turn the lighting control to position B. The parking lamps operate with the ignition on or off.

2017 Fiesta (CCT) Canada/United States of America, HE8J 19A321 AB enUSA, Edition date: 201607, Second Printing

High Beams

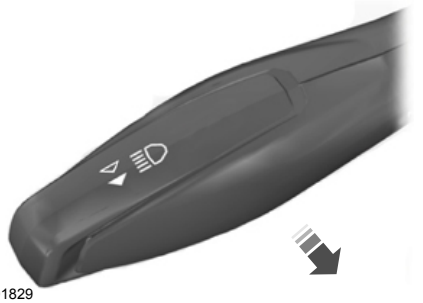

E101829

Pull the lever fully toward you to switch the high beams on.

Pull the lever fully toward you again to switch the high beams off.

Headlamp Flasher

Pull the lever toward you slightly and release it to flash the headlamps.

AUTOLAMPS (If Equipped)

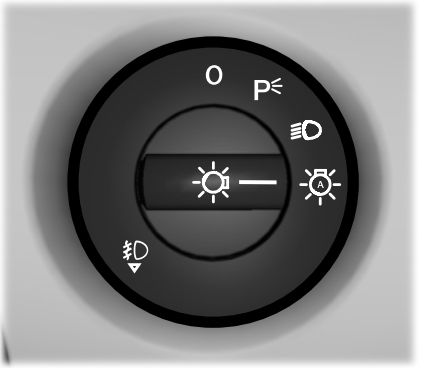

E158778

When the lighting control is in the autolamps position, the headlamps automatically turn on in low light situations or when the wipers turn on.

The headlamps will remain on for a period of time after you switch the ignition off. Use the information display controls to adjust the period of time that the headlamps remain on. See **Information Displays** (page 86).

Note: *If you switch autolamps on, you can only switch the high beam headlamps on when the autolamps turn the headlamps on.*

Windshield Wiper Activated Headlamps

The windshield wiper activated headlamps turn on within 10 seconds when you switch the windshield wipers on and the lighting control is in the autolamps position. They turn off approximately 60 seconds after you switch the windshield wipers off.

The headlamps do not turn on by wiper activation:

- During a single wipe.
- When the wipers are on to clear washer fluid during a wash condition.

Note: *If you switch autolamps and autowipers on, the headlamps will automatically turn on when the windshield wipers continuously operate.*

2017 Fiesta (CCT) Canada/United States of America, HE8J 19A321 AB enUSA, Edition date: 201607, Second Printing

INSTRUMENT LIGHTING DIMMER

E156652

HEADLAMP EXIT DELAY

After you switch the ignition off, you can switch the headlamps on by pulling the direction indicator lever toward you. You will hear a short tone. The headlamps will switch off automatically after three minutes with any door open or 30 seconds after the last door has been closed. You can cancel this feature by pulling the direction indicator toward you again or switching the ignition on.

DAYTIME RUNNING LAMPS (If Equipped)

WARNING

The daytime running lamps system does not activate the rear lamps and may not provide adequate lighting during low visibility driving conditions. Also, the autolamps switch position may not activate the headlamps in all low visibility conditions, such as daytime fog. Make sure the headlamps are switched to auto or on, as appropriate, during all low visibility conditions. Failure to do so may result in a crash.

The system switches the headlamps on in daylight conditions.

To switch the system on:

1. Switch the ignition on.
2. Turn the lighting control to the off, autolamp or parking lamp position.
3. Make sure the transmission selector lever is not in position **P**.

2017 Fiesta (CCT) Canada/United States of America, HE8J 19A321 AB enUSA, Edition date: 201607, Second Printing

FRONT FOG LAMPS (If Equipped)

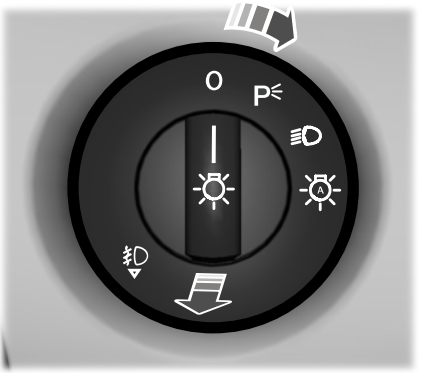

E156823

Pull the control to switch the fog lamps on or off.

You cannot switch the fog lamps on when the lighting control is in the off or autolamps position.

DIRECTION INDICATORS

E102016

Push the lever up or down to use the direction indicators.

Note: *Tap the lever up or down to make the direction indicators flash three times to indicate a lane change.*

INTERIOR LAMPS

Front Interior Lamps

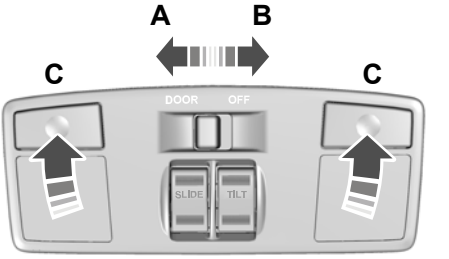

E156878

A	Door contact
B	Off
C	Reading lamps

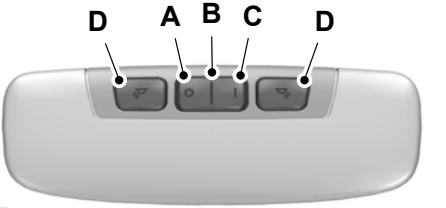

E170657

A	Off
B	Door contact
C	On
D	Reading lamps

2017 Fiesta (CCT) Canada/United States of America, HE8J 19A321 AB enUSA, Edition date: 201607, Second Printing

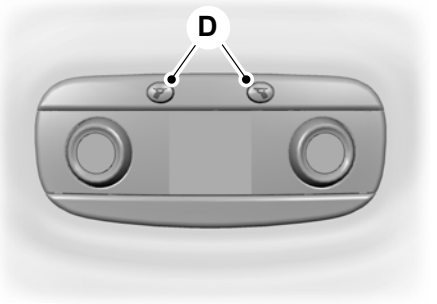

E170600

D Reading lamps.

When the switch is set to the door contact position, the courtesy lamp will illuminate when you unlock or open a door or the liftgate. If you leave a door open with the ignition switched off, the courtesy lamp will go off automatically after some time to prevent your vehicle battery from losing charge. To switch it back on, switch the ignition on for a short time.

The courtesy lamp will also illuminate when you switch the ignition off. It will go off automatically after a short time or when you start the engine.

Reading Lamps

If you switch the ignition off, the reading lamps will go off automatically after some time to prevent your vehicle battery from losing charge. To switch them back on, switch the ignition on for a short time.

Rear Interior Lamps (If Equipped)

Press to switch individual lamps on and off.

AMBIENT LIGHTING (If Equipped)

The ambient lighting system illuminates the interior with a choice of several colors. The ambient lighting control is located on the instrument panel.

E158830

Press and release the switch to cycle through the color choices and the off condition.

The ambient lighting will switch on when you switch the ignition on.

The ambient lighting will remain on until you switch the ignition off and one of the following conditions have been met:

- You lock your vehicle.
- The accessory delay timer expires.

2017 Fiesta (CCT) Canada/United States of America, HE8J 19A321 AB enUSA, Edition date: 201607, Second Printing

POWER WINDOWS

WARNINGS

Do not leave children unattended in your vehicle and do not let them play with the power windows. They may seriously injure themselves.

When closing the power windows, you should verify they are free of obstructions and make sure that children and pets are not in the proximity of the window openings.

E70848

Press the control to open the window.

Lift the control to close the window.

Note: *You may hear a pulsing noise when just one of the windows is open. Lower the opposite window slightly to reduce this noise.*

One-Touch Down (If Equipped)

Press the control fully and release it. Press again or lift it to stop the window.

One-Touch Up (If Equipped)

Lift the control fully and release it. Press or lift it again to stop the window.

Window Lock

E70850

Press the control to lock or unlock the rear window controls. It lights when the rear window controls lock.

Bounce-Back (If Equipped)

The window stops automatically while closing. It reverses some distance if there is an obstacle in the way.

Overriding the Bounce-Back Feature

WARNING

When you override the bounce-back feature the window will not reverse if it detects an obstacle. Take care when closing the windows to avoid personal injury or damage to your vehicle.

Proceed as follows to override this protection feature when there is a resistance, for example in winter:

2017 Fiesta (CCT) Canada/United States of America, HE8J 19A321 AB enUSA, Edition date: 201607, Second Printing

1. Close the window twice until it reaches the point of resistance and let it reverse.
2. Close the window a third time to the point of resistance. You disabled the bounce-back feature and you can now close the window manually. The window travels past the point of resistance and you can close it fully.

Contact an authorized dealer as soon as possible if the window does not close after the third attempt.

Resetting the Bounce-Back Feature

WARNING

The bounce-back feature remains turned off until you reset the memory.

If you have disconnected the battery, you must reset the bounce-back memory separately for each window.

1. Lift and hold the control until the window is fully closed.
2. Release the control.
3. Lift and hold the control again for a few seconds.
4. Release the control.
5. Lift and hold the control again for a few seconds.
6. Release the control.
7. Press and hold the control until the window is fully open.
8. Lift and hold the control until the window is fully closed.
9. Release the control.
10. Open the window and then try to close it automatically.
11. Repeat the procedure if the window does not close automatically.

Accessory Delay (If Equipped)

You can use the window controls for several minutes after switching off the ignition or until opening either front door.

EXTERIOR MIRRORS

Power Exterior Mirrors

WARNING

Do not adjust the mirrors when your vehicle is moving. This could result in the loss of control of your vehicle, serious personal injury or death.

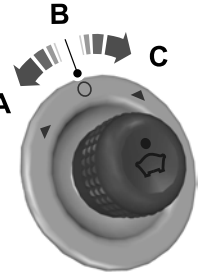

E71280

A	Left-hand mirror
B	Off
C	Right-hand mirror

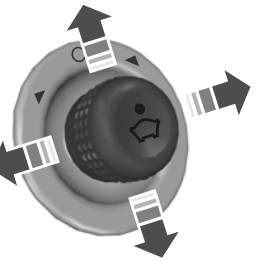

E71281

2017 Fiesta (CCT) Canada/United States of America, HE8J 19A321 AB enUSA, Edition date: 201607, Second Printing

Move the controller in the direction of the arrows to adjust the mirror.

Fold-Away Exterior Mirrors

Push the mirror toward the door window glass. Make sure that you fully engage the mirror in its support when returning it to its original position.

Integrated Blind Spot Mirrors (If Equipped)

WARNING

Objects in the blind spot mirror are closer than they appear.

Blind spot mirrors have an integrated convex mirror built into the upper outboard corner of the exterior mirrors. They are designed to increase your visibility along the side of your vehicle.

Check the main mirror first before a lane change, then check the blind spot mirror. If no vehicles are present in the blind spot mirror and the traffic in the adjacent lane is at a safe distance, signal that you intend to change lanes. Glance over your shoulder to verify traffic is clear and carefully change lanes.

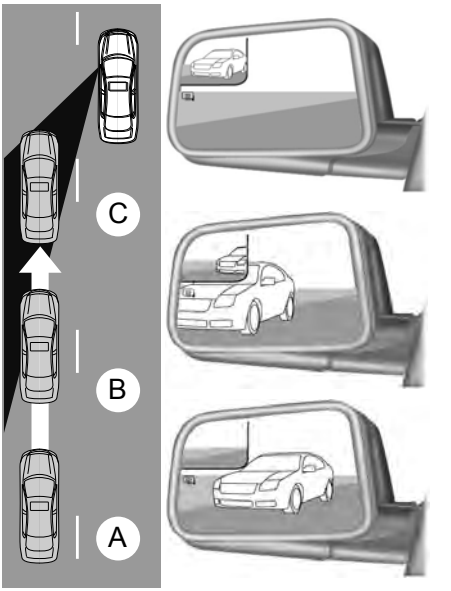

E138665

The image of the approaching vehicle is small and near the inboard edge of the main mirror when it is at a distance. The image becomes larger and begins to move outboard across the main mirror as the vehicle approaches (A). The image will transition from the main mirror and begin to appear in the blind spot mirror as the vehicle approaches (B). The vehicle will transition to your peripheral field of view as it leaves the blind spot mirror (C).

INTERIOR MIRROR

WARNING

Do not adjust the mirrors when your vehicle is moving. This could result in the loss of control of your vehicle, serious personal injury or death.

2017 Fiesta (CCT) Canada/United States of America, HE8J 19A321 AB enUSA, Edition date: 201607, Second Printing

Note: *Do not clean the mirror housing or glass with harsh abrasives, fuel or other petroleum-based cleaning products.*

You can adjust the interior mirror to your preference. Some mirrors also have a second pivot point. This lets you move the mirror head up or down and from side to side.

Pull the tab below the mirror toward you to reduce glare at night.

Auto-Dimming Mirror (If Equipped)

Note: *Do not block the sensors on the front and back of the mirror. A rear center passenger or raised rear center head restraint may also block light from reaching the sensor.*

The mirror dims to reduce glare when bright lights are detected from behind your vehicle. It will automatically return to normal reflection when you select reverse gear to make sure you have a clear view when backing up.

MOONROOF (If Equipped)

WARNINGS

Do not let children play with the moonroof or leave them unattended in the vehicle. They may seriously hurt themselves.

When closing the moonroof, you should verify that it is free of obstructions and make sure that children and pets are not in the proximity of the roof opening.

The moonroof controls are located on the overhead console.

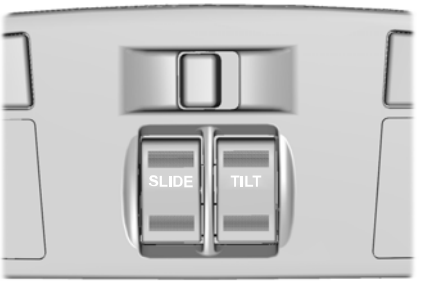

E156620

Opening and Closing the Moonroof

Press and release the rear of the **SLIDE** control to open the moonroof. The sliding shade will automatically open, if closed, while the moonroof opens.

Press and hold the front of the **SLIDE** control to close the moonroof.

Note: *The sliding shade will not automatically close.*

Moonroof Sliding Shade

You can manually open or close the sliding shade when the moonroof is closed. Slide the shade backward or forward to open or close it.

Venting the Moonroof

Press and hold the rear of the **TILT** control to vent the moonroof.

Press and hold the front of the **TILT** control to close the moonroof.

2017 Fiesta (CCT) Canada/United States of America, HE8J 19A321 AB enUSA, Edition date: 201607, Second Printing

GAUGES

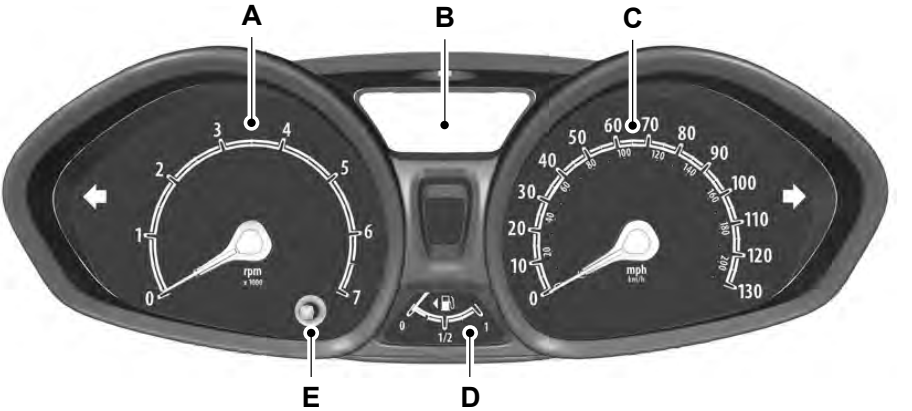

E102660

A Tachometer

B Information display and engine coolant temperature gauge

C Speedometer

D Fuel gauge

E Tripmeter reset button

Compass (If Equipped)

Displays the vehicle's heading direction.

To calibrate and set the compass zone use the information display menu. See **Information Displays** (page 86).

Use the diagram to determine your magnetic zone.

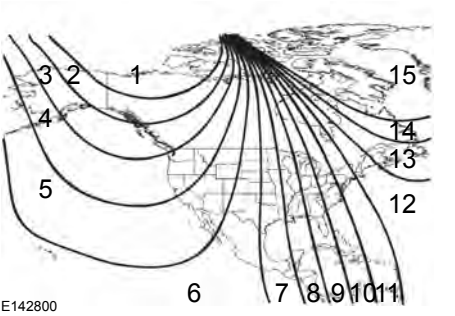

E142800

2017 Fiesta (CCT) Canada/United States of America, HE8J 19A321 AB enUSA, Edition date: 201607, Second Printing

Engine Coolant Temperature Gauge

E140760

Displays the temperature of the engine coolant. At normal operating temperature the indicator will remain in the center section.

Fuel Gauge

Switch the ignition on. The fuel gauge will indicate approximately how much fuel is left in the fuel tank. The fuel gauge may vary slightly when your vehicle is moving or on a gradient. The arrow adjacent to the fuel pump symbol indicates on which side of your vehicle the fuel filler door is located.

Low Fuel Reminder

Vehicles with Trip Computer

A low fuel level reminder displays and sounds when the distance to empty reaches 75 mi (120 km) for MyKey and 50 mi (80 km) for all other keys.

Note: *The low fuel reminder can appear at different fuel gauge positions depending on fuel economy conditions. This variation is normal.*

Vehicles without Trip Computer

A low fuel level reminder displays and sounds when the fuel gauge needle is at 1/16th.

WARNING LAMPS AND INDICATORS

The following warning lamps and indicators alert you to a vehicle condition that may become serious. Some lamps illuminate when you start your vehicle to make sure they work. If any lamps remain on after starting your vehicle, refer to the respective system warning lamp for further information.

Note: *Some warning indicators appear in the information display and operate the same as a warning lamp but do not illuminate when you start your vehicle.*

Airbag Warning Lamp

If it does not illuminate when you switch the ignition on, continues to flash or remains on when the engine is running, this indicates a malfunction. Have your vehicle checked as soon as possible.

Anti-Lock Brake System Warning Lamp

If it illuminates when you are driving, this indicates a malfunction. Your vehicle continues to have normal braking without the anti-lock brake system function. Have your vehicle checked as soon as possible.

Brake System Warning Lamp

WARNING

Driving your vehicle with the warning lamp on is dangerous. A significant decrease in braking performance may occur. It may take you longer to stop your vehicle. Have your vehicle checked as soon as possible. Driving extended distances with the parking brake engaged can cause brake failure and the risk of personal injury.

2017 Fiesta (CCT) Canada/United States of America, HE8J 19A321 AB enUSA, Edition date: 201607, Second Printing

It illuminates when you engage the parking brake and the ignition is on.

If it illuminates when your vehicle is moving, make sure the parking brake is disengaged. If the parking brake is disengaged, this indicates low brake fluid level or a brake system fault. Have your vehicle checked immediately.

Cruise Control Indicator

It illuminates when you switch the system on.

See **Using Cruise Control** (page 144).

Direction Indicator

Illuminates when the left or right direction indicator or the hazard warning flasher is turned on. Flashes during operation. An increase in the rate of flashing warns of a failed indicator bulb.

Door Ajar Warning Lamp

It illuminates when you switch the ignition on and remains on if any door or the hood is open.

Engine Coolant Temperature Warning Lamp

If it illuminates when your vehicle is moving, this indicates that the engine is overheating. Stop your vehicle as soon as it is safe to do so and switch the engine off. Have your vehicle checked as soon as possible.

Engine Warning Lamps

Powertrain Warning Lamp

If it illuminates when the engine is running this indicates a malfunction. Drive in a moderate fashion (avoid heavy acceleration and deceleration). Continuing to drive your vehicle may cause reduced power or the engine to stop. Switch the ignition off and attempt to restart the engine. Have your vehicle checked as soon as possible.

Service Engine Soon

If it illuminates when the engine is running this indicates a malfunction. The On Board Diagnostics system has detected a malfunction of the vehicle emission control system.

If it flashes, engine misfire may be occurring. Increased exhaust gas temperatures could damage the catalytic converter or other vehicle components. Drive in a moderate fashion (avoid heavy acceleration and deceleration) and have your vehicle immediately serviced.

It illuminates when you switch the ignition on prior to engine start to check the bulb and to indicate whether your vehicle is ready for Inspection and Maintenance (I/M) testing.

Normally, it illuminates until the engine is cranked and automatically turns off if no malfunctions are present. However, if after 15 seconds it flashes eight times, this indicates that your vehicle is not ready for Inspection and Maintenance (I/M) testing. See **Emission Control System** (page 123).

Fasten Seatbelt Warning Lamp

It illuminates and a chime sounds until you fasten the seatbelts.

2017 Fiesta (CCT) Canada/United States of America, HE8J 19A321 AB enUSA, Edition date: 201607, Second Printing

Front Fog Lamp Indicator

It illuminates when you switch the front fog lamps on.

Headlamp High Beam Indicator

It illuminates when you switch the headlamp high beam on.

Ignition Warning Lamp

If it illuminates when the engine is running this indicates a malfunction. Have your vehicle checked as soon as possible.

Lamps on Indicator

It illuminates when you switch the headlamp low beam or the side and rear lamps on.

Low Fuel Level Warning Lamp

If it illuminates when you are driving, refuel as soon as possible.

Low Tire Pressure Warning Lamp

(If Equipped)

It illuminates if the tire pressure in one or more tires is below the correct tire pressure.

Message Center Indicator

It illuminates when a new message is stored in the information display. The indicator is red or amber depending on the severity of the condition and it remains on until the condition is resolved.

See **Information Messages** (page 88).

Oil Pressure Warning Lamp

WARNING

If it illuminates when you are driving do not continue your journey, even if the oil level is correct. Have your vehicle checked.

If it illuminates when the engine is running this indicates a malfunction. Stop your vehicle as soon as it is safe to do so and switch the engine off. Check the engine oil level. If the oil level is sufficient, this indicates a system malfunction. Have your vehicle checked immediately.

See **Engine Oil Check** (page 186).

Shift Indicator

It illuminates to advise you that shifting to a higher gear may give better performance, fuel economy or lower emissions.

Stability Control and Traction Control Indicator

Flashes during operation.

If it does not illuminate when you switch the ignition on, or remains on when the engine is running, this indicates a malfunction. Have your vehicle checked as soon as possible.

Note: *The system automatically turns off if there is a malfunction.*

See **Stability Control** (page 136). See **Traction Control** (page 135).

Stability Control and Traction Control Off Warning Lamp

It illuminates when you switch the system off.

2017 Fiesta (CCT) Canada/United States of America, HE8J 19A321 AB enUSA, Edition date: 201607, Second Printing

AUDIBLE WARNINGS AND INDICATORS

Exterior Lamps On

Sounds when you remove the key from the ignition and open the driver door, and you have left the headlamps or parking lamps on.

Gearshift Lever Not in Park (P)

Sounds when the driver door is open, the key is in the ignition and the gearshift lever is not in park (P).

Key in Ignition

Sounds when the driver door is open and the key is in the ignition.

Key Outside Vehicle - Vehicles With Keyless System

Sounds when you close the driver door, the key is outside your vehicle and the engine is running. The system does not detect a passive key inside your vehicle.

Parking Brake On

Sounds when the parking brake is on and your vehicle is moving. If the warning chime continues to sound when you release the parking brake, have the system checked by an authorized dealer.

Safety Belt Minder

WARNINGS

The safety belt minder remains in stand-by mode when the front safety belts have been fastened. It will sound if either safety belt is unfastened.

WARNINGS

Do not sit on top of a fastened safety belt to prevent the safety belt minder from coming on. The occupant protection system will only provide optimum protection when you use the safety belt correctly.

Sounds when your vehicle speed exceeds the pre-determined limit and the front safety belts are unfastened. The chime will stop after a period of time.

2017 Fiesta (CCT) Canada/United States of America, HE8J 19A321 AB enUSA, Edition date: 201607, Second Printing

GENERAL INFORMATION

WARNING

Driving while distracted can result in loss of vehicle control, crash and injury. We strongly recommend that you use extreme caution when using any device that may take your focus off the road. Your primary responsibility is the safe operation of your vehicle. We recommend against the use of any hand-held device while driving and encourage the use of voice-operated systems when possible. Make sure you are aware of all applicable local laws that may affect the use of electronic devices while driving.

Information Display Controls

E103626

Use the information display controls on the steering wheel to adjust various system settings on your vehicle. The information display shows the system settings.

- Press the up or down arrow buttons to scroll through the list.
- Press the right arrow button to enter a submenu.
- Press the left arrow button to exit a submenu.
- Press the ***OK*** button to choose and confirm settings or messages.

System Check

Active warnings appear first. Press the up or down arrow buttons to scroll through the list.

Menu Structure

Note: *Some menus may show features as used in different models, so may appear different to you on your vehicle.*

Phone	Dial number
	Redial
	Phone book
	Call History
	Speed Dial
	Text Messaging
	BT device
	Phone settings
Ford EcoMode	
SYNC-Settings	Bluetooth on
	Set defaults
	Master reset
	Install on SYNC
	System info
	Voice settings
	Unpair
SYNC-Apps	
Navigation	Route options
	Map display
	Assistance options
	Personal data

2017 Fiesta (CCT) Canada/United States of America, HE8J 19A321 AB enUSA, Edition date: 201607, Second Printing

	Reset all settings
Audio settings	Adaptive volume
	Sound
	Nav audio mixing
	DSP settings
	DSP equaliser
	Traffic
	News
	Alt. frequency
	RDS regional
Vehicle settings	Traction control
	Hill start assist
	Alarm system
	Power mirror
	Indicator
	Ambient light
	Chimes
Clock settings	Auto time (GPS)
	Set time
	Set date
	Set time zone
	24-hour mode
Display settings	Measure unit
	Language
	Dimming
MyKey	Create MyKey
	Traction control
	ESC
	Max Speed
	Speed warning
	MyKey Volume limit
	Information
	Clear MyKeys

CLOCK

Type 1

To adjust the clock, switch the ignition on and press buttons H or M on the information and entertainment display as necessary.

Type 2

Note: *Use the information display to adjust the clock. See* ***General Information*** *(page 86).*

TRIP COMPUTER

E102759

Press the button to scroll through the displays.

You can reset the trip odometer, average fuel consumption and average speed.

1. Scroll to the required display.
2. Press and hold the button to reset the trip computer.

2017 Fiesta (CCT) Canada/United States of America, HE8J 19A321 AB enUSA, Edition date: 201607, Second Printing

The Trip Computer Includes the Following Information Displays

Trip Odometer

MI TRIP — Records the distance traveled on individual journeys.

KM TRIP

Distance to Empty

MI TO E — Indicates the approximate distance your vehicle will travel on the fuel remaining in the tank. The distance to empty displayed may vary depending on driving style and road conditions.

KM TO E

Average Fuel Consumption

AVG MPG — Indicates the average fuel consumption since the function was last reset.

AVG km/l

Instantaneous Fuel Consumption

MPG — Indicates the current fuel consumption.

L/100KM

Average Speed

AVG MPH — Indicates the average speed since the function was last reset.

AVG km/h

Distance Odometer

MI — Records the total distance traveled by your vehicle.

KM

PERSONALIZED SETTINGS

Measure Units

To swap between imperial and metric units, scroll to this display and press the **OK** button.

Swapping between imperial and metric units will affect the following displays:

- Distance to empty.
- Average fuel consumption.
- Instantaneous fuel consumption.
- Average speed.

Switching Chimes Off

To switch chimes off, scroll to this display and press the **OK** button.

The following chimes can be switched off:

- Warning messages.
- Information messages.

INFORMATION MESSAGES

E103626

2017 Fiesta (CCT) Canada/United States of America, HE8J 19A321 AB enUSA, Edition date: 201607, Second Printing

Press the ***OK*** button to acknowledge and remove some messages from the information display. The information display will automatically remove other messages after a short period of time.

You need to confirm certain messages before you can access the menus.

The message indicator illuminates to supplement some messages. The indicator is red or amber depending on the severity of the condition and it remains on until the condition is resolved.

A system-specific symbol with a message indicator may supplement some messages.

Note: *Depending on your vehicle options and instrument cluster type, not all of the messages will display or be available. The information display may abbreviate or shorten certain messages.*

Airbag

Message	Message Indicator	Action
Airbag fault Service now	Amber	Have your vehicle checked as soon as possible.

Alarm

Message	Message Indicator	Action
Alarm triggered Check vehicle	Amber	Displays when the alarm has been triggered due to unauthorized entry. See **Security** (page 65).
Alarm system malfunction Service required	-	Have your vehicle checked as soon as possible.

Anti-Lock Brake System

Message	Message Indicator	Action
ABS malfunction Service now	Amber	Have your vehicle checked as soon as possible.

2017 Fiesta (CCT) Canada/United States of America, HE8J 19A321 AB enUSA, Edition date: 201607, Second Printing

Engine Immobilizer

Message	Message Indicator	Action
Immobiliser malfunction Service now	Red	Have your vehicle checked as soon as possible.

Fuel System

Message	Message Indicator	Action
Check Fuel Fill Inlet	-	Displays if the fuel fill inlet did not fully close. See **Refueling** (page 120).
Fuel Level Low	-	Refuel as soon as possible.

Hill Start Assist

Message	Message Indicator	Action
Hill start assist not available	Amber	Displays when hill start assist is not available. Have your vehicle checked as soon as possible. See **Hill Start Assist** (page 133).

Keyless Entry

Message	Message Indicator	Action
Key not detected	Amber	Displays when the system cannot detect a valid key. See **Keyless Entry** (page 61).
Key outside car	Amber	Displays when the system cannot detect a valid key. See **Keyless Entry** (page 61).
Key Battery low Replace soon	Amber	Displays when the remote key battery requires replacing.

2017 Fiesta (CCT) Canada/United States of America, HE8J 19A321 AB enUSA, Edition date: 201607, Second Printing

Message	Message Indicator	Action
		See **Remote Control** (page 47).
Switch ignition off Press ENGINE Start/Stop button	Amber	Displays if you switch the ignition on without starting the engine. See **Keyless Starting** (page 112).
Close trunk or use spare key	-	See **Keyless Entry** (page 61).

Lighting

Message	Message Indicator	Action
Left Indicator malfunction Change bulb	-	Displays if a direction indicator bulb fails. See **Changing a Bulb** (page 197).
Right Indicator malfunction Change bulb	-	

Maintenance

Message	Message Indicator	Action
Brake fluid level low Service now	Red	Displays if the brake fluid level is low or if there is a brake system fault. See **Brake Fluid Check** (page 192). Have your vehicle checked immediately.
Brake system fault Stop safely	Red	Have your vehicle checked immediately.
Engine fault Service now	Amber	Have your vehicle checked as soon as possible.
Engine oil change due Service required	-	Displays when the engine oil life is depleted and your vehicle requires an oil change.

2017 Fiesta (CCT) Canada/United States of America, HE8J 19A321 AB enUSA, Edition date: 201607, Second Printing

MyKey

Message	Message Indicator	Action
MyKey Vehicle at Top Speed	Amber	Displays when a MyKey is in use and the MyKey speed limit is reached. See **MyKey™** (page 52).
MyKey active Drive Safely	-	Displays when MyKey is active. See **MyKey™** (page 52).
Speed Limited to {MyKey limit ##0} km/h	-	Displays when starting your vehicle, a MyKey is in use and the MyKey speed limit is on. See **MyKey™** (page 52).
MyKey Check speed Drive safely	-	Displays when a MyKey is in use and the MyKey speed limit is reached. See **MyKey™** (page 52).
MyKey Vehicle near top speed	-	Displays when a MyKey is in use and your vehicle speed approaches a preset speed limit. See **MyKey™** (page 52).
MyKey Buckle up to unmute audio	-	Displays when a MyKey is in use and seat-belt reminder is activated. See **MyKey™** (page 52).
MyKey Park aid cannot be deactivated	-	Displays when a MyKey is in use and the user tries to switch the parking aid system off. See **MyKey™** (page 52).
MyKey ESC cannot be deactivated	-	Displays when a MyKey is in use and the user tries to switch the stability control system off. See **MyKey™** (page 52).
MyKey Volume limit	-	Displays when a MyKey is in use and the user tries to exceed 45% of the maximum volume. See **MyKey™** (page 52).

2017 Fiesta (CCT) Canada/United States of America, HE8J 19A321 AB enUSA, Edition date: 201607, Second Printing

Parking Brake

Message	Message Indicator	Action
Park brake applied	Red	Displays if you have not released the parking brake and your vehicle reaches 6 mph (10 km/h). If the warning message remains on after you have released the parking brake, the system has detected a fault that requires service. Have your vehicle checked as soon as possible. See **Parking Brake** (page 133).
Park brake applied	Amber	

Stability Control

Message	Message Indicator	Action
Electronic stability control off	Amber	Displays when you switch the system off. See **Using Stability Control** (page 137).
Sport mode	-	Displays when you switch the system on.

Starting System

Message	Message Indicator	Action
Press Brake to Start	-	Displays when you start your vehicle as a reminder to fully press the brake pedal. See **Starting and Stopping the Engine** (page 112).
Press clutch to start	-	Displays when you start your vehicle as a reminder to fully press the clutch pedal. See **Starting and Stopping the Engine** (page 112).
Press brake and clutch to start	-	Displays when you start your vehicle as a reminder to fully press the brake and clutch pedals. See **Starting and Stopping the Engine** (page 112).
Cranking Time Exceeded	-	Displays if your vehicle fails to start.

2017 Fiesta (CCT) Canada/United States of America, HE8J 19A321 AB enUSA, Edition date: 201607, Second Printing

Message	Message Indicator	Action
		See **Starting and Stopping the Engine** (page 112).

Steering System

Message	Message Indicator	Action
Steering assist fault Service required	Amber	You will continue to have full steering but will need to exert greater force on the steering wheel. Have your vehicle checked as soon as possible.

Tire pressure monitoring system

Message	Message Indicator	Action
Check Tire Pressures	Amber	Displays if the tire pressure in one or more tires is below the correct pressure. See **Tire Pressure Monitoring System** (page 234).
Tire Monitor Malfunction Service Required	Amber	The system has detected a fault that requires service. Have your vehicle checked as soon as possible.

Traction Control

Message	Message Indicator	Action
Traction control off	-	Displays when you switch the system off. See **Traction Control** (page 135).
Sport mode	-	Displays when you switch the system on.

2017 Fiesta (CCT) Canada/United States of America, HE8J 19A321 AB enUSA, Edition date: 201607, Second Printing

Transmission

Message	Message Indicator	Action
Transmission Malfunction Service Now	Red	Have your vehicle checked as soon as possible.
Transmission Over Temperature Stop Safely	Red	The transmission is overheating and needs to cool. Stop your vehicle as soon as it is safe to do so, switch the engine off and allow the transmission to cool.
Transmission not in Park Select P	-	Displays as a reminder to shift into park (P).
Transmission ready	-	Displays when your vehicle is ready to drive.
Press brake to unlock selector lever	-	Press the brake pedal to unlock the transmission. See **Automatic Transmission** (page 127).
Selector lever unlocked	-	Displays when the transmission selector lever unlocks. See **Automatic Transmission** (page 127).

Vehicle Settings

Message	Message Indicator	Action
Transport Mode Contact Dealer	-	Your vehicle is in transport mode. Some features on your vehicle are not available. Have your vehicle checked as soon as possible.

2017 Fiesta (CCT) Canada/United States of America, HE8J 19A321 AB enUSA, Edition date: 201607, Second Printing

MANUAL CLIMATE CONTROL

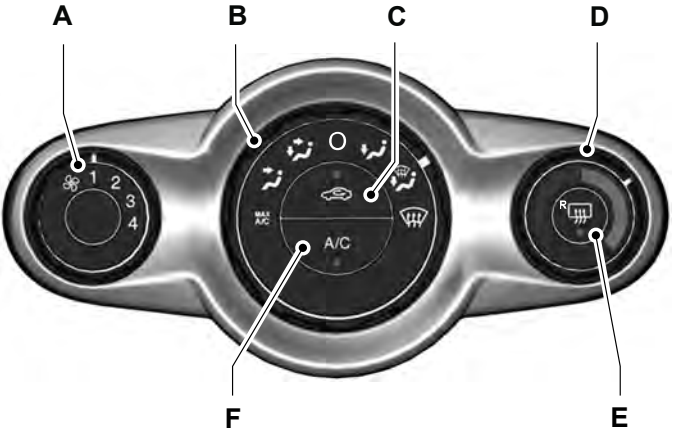

E158234

A **Fan speed control:** Adjust the volume of air circulated in the vehicle.

B **Air distribution control:** Adjust the control to turn airflow from the windshield, instrument panel, or footwell vents on or off. You can distribute air through any combination of these vents.

C **Recirculated air:** Press the button to switch between outside air and recirculated air. The air currently in the passenger compartment recirculates. This can reduce the time needed to cool the interior and reduce unwanted odors from entering your vehicle.

D **Temperature control:** Controls the temperature of the air circulated in your vehicle.

E **Heated rear window:** Press the button to switch the heated rear window on and off.

F **A/C:** Press the button to switch the air conditioning on or off. Air conditioning cools your vehicle using outside air. To improve the time to reach a comfortable temperature in hot weather, drive with the windows open until you feel cold air through the air vents.

2017 Fiesta (CCT) Canada/United States of America, HE8J 19A321 AB enUSA, Edition date: 201607, Second Printing

AUTOMATIC CLIMATE CONTROL (If Equipped)

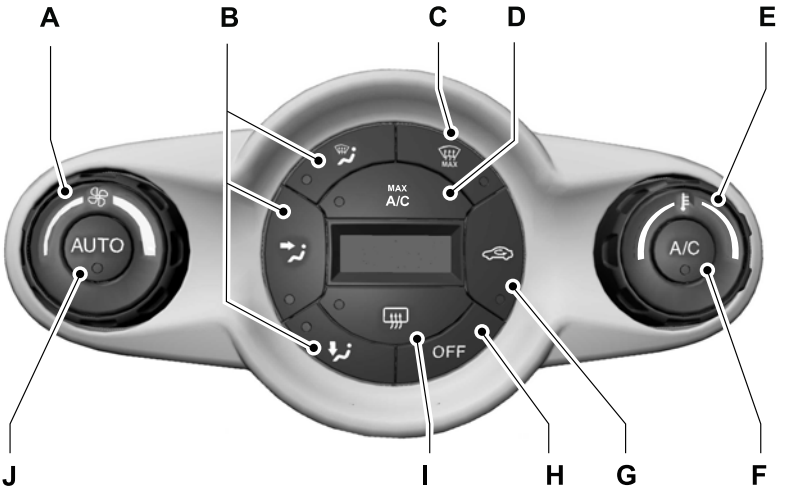

E158263

A **Fan speed:** Adjust the volume of air circulated in the vehicle.

B **Air distribution control:** Adjust the control to turn airflow from the windshield, instrument panel, or footwell vents on or off. You can distribute air through any combination of these vents.

C **MAX Defrost:** Press the button to switch on defrost. Outside air flows through the windshield vents, air conditioning automatically turns on, and fan automatically adjusts to the highest speed. You can also use this setting to defrost and clear the windshield of a thin covering of ice. The heated rear window also automatically turns on when you select maximum defrost.

D **MAX A/C:** Press the button to maximize cooling. Recirculated air flows through the instrument panel vents, air conditioning automatically turns on, and the fan automatically adjusts to the highest speed.

E **Temperature control:** Controls the temperature of the air circulated in your vehicle.

F **A/C:** Press the button to switch the air conditioning on or off. Air conditioning cools your vehicle using outside air. To improve the time to reach a comfortable temperature in hot weather, drive with the windows open until you feel cold air through the air vents.

2017 Fiesta (CCT) Canada/United States of America, HE8J 19A321 AB enUSA, Edition date: 201607, Second Printing

G **Recirculated air:** Press the button to switch between outside air and recirculated air. The air currently in the passenger compartment recirculates. This can reduce the time needed to cool the interior and reduce unwanted odors from entering your vehicle.

Note: Recirculated air may also turn on and off automatically in instrument panel or instrument panel and floor airflow modes during hot weather to improve cooling efficiency.

H **OFF:** Press the button to switch the system on and off. When the system is off, it prevents outside air from entering the vehicle.

I **Heated rear window:** Press the button to switch the heated rear window on and off.

J **AUTO:** Press the button to switch on automatic operation. Select the desired temperature using the temperature control. The system adjusts fan speed, air distribution, air conditioning operation, and selects outside air or recirculated air to heat or cool the vehicle in order to maintain the desired temperature.

Temperature Control

E148690

You can set the temperature between 61ºF (16ºC) and 82ºF (28ºC). In position low, the system switches to permanent cooling. In position high, the system switches to permanent heating.

Note: *If you select either position low or high, the system will not regulate a stable temperature.*

HINTS ON CONTROLLING THE INTERIOR CLIMATE

General Hints

WARNING

Prolonged use of recirculated air may cause the windows to fog up. If the windows fog up, follow the settings for demisting the windshield.

Note: *You may feel a small amount of air from the footwell air vents regardless of the air distribution setting.*

Note: *To reduce humidity build-up inside your vehicle, do not drive with the system switched off or with recirculated air always switched on.*

Note: *Do not place objects under the front seats as this may interfere with the airflow to the rear seats.*

Note: *Remove any snow, ice or leaves from the air intake area at the base of the windshield.*

2017 Fiesta (CCT) Canada/United States of America, HE8J 19A321 AB enUSA, Edition date: 201607, Second Printing

Manual Climate Control

Note: *To reduce fogging of the windshield during humid weather, adjust the air distribution control to the windshield air vents position.*

Automatic Climate Control

Note: *Adjusting the settings when your vehicle interior is extremely hot or cold is not necessary. The system automatically adjusts to heat or cool the interior to your selected temperature as quickly as possible. For the system to function efficiently, the instrument panel and side air vents should be fully open.*

Note: *At low ambient temperatures with **AUTO** selected, the air stream is directed toward the windshield and side windows for as long as the engine remains cold.*

Note: *When the system is switched off, outside air is prevented from entering your vehicle.*

Note: *When you select **AUTO** mode and the interior and exterior temperatures are high, the system automatically selects recirculated air to maximize cooling of the interior. When the desired air temperature is reached, the system automatically selects outside air.*

Note: *When you select windshield defrosting and defogging, the instrument panel and footwell level functions automatically switch off and air conditioning switches on. Outside air flows into your vehicle.*

Heating the Interior Quickly

	Vehicles With Manual Climate Control	Vehicles With Automatic Climate Control
1	Adjust the fan speed to the highest setting.	Press the **AUTO** button.
2	Adjust the temperature control to the highest setting.	Adjust the temperature control to the full heat position.
3	Adjust the air distribution control to the footwell air vents position.	

Recommended Settings for Heating

	Vehicles With Manual Climate Control	Vehicles With Automatic Climate Control
1	Adjust the fan speed to the second setting.	Press the **AUTO** button.
2	Adjust the temperature control to the desired setting.	Adjust the temperature control to the desired setting.
3	Adjust the air distribution control to the footwell and windshield air vents position.	

2017 Fiesta (CCT) Canada/United States of America, HE8J 19A321 AB enUSA, Edition date: 201607, Second Printing

Cooling the Interior Quickly

	Vehicles With Manual Climate Control	Vehicles With Automatic Climate Control
1	Adjust the fan speed to the highest setting.	Press the **MAX A/C** button.
2	Adjust the temperature control setting to **MAX A/C**.	
3	Adjust the air distribution control to the instrument panel air vents position.	

Recommended Settings for Cooling

	Vehicles With Manual Climate Control	Vehicles With Automatic Climate Control
1	Adjust the fan speed to the second setting.	Press the **AUTO** button.
2	Adjust the temperature control to the desired setting.	Adjust the temperature control to the desired setting.
3	Adjust the air distribution control to the instrument panel air vents position.	
4	Press the **A/C** button.	

Vehicle Stationary for Extended Periods During Extreme High Ambient Temperatures

	Vehicles With Manual Climate Control	Vehicles With Automatic Climate Control
1	Apply the parking brake.	Apply the parking brake.
2	Move the transmission selector lever to position **P** or neutral.	Move the transmission selector lever to position **P** or neutral.
3	Adjust the temperature control to the **MAX A/C** position.	Press the **AUTO** button.
4	Adjust the fan speed to the highest setting.	Adjust the temperature control to the desired setting.

2017 Fiesta (CCT) Canada/United States of America, HE8J 19A321 AB enUSA, Edition date: 201607, Second Printing

Side Window Defogging in Cold Weather

	Vehicles With Manual Climate Control	Vehicles With Automatic Climate Control
1	Adjust the fan speed to the highest setting.	Press the MAX defrost button.
2	Adjust the temperature control to the highest setting.	
3	Adjust the air distribution control to the windshield position.	
4	Press the **A/C** button.	

Maximum Cooling Performance in Instrument Panel or Instrument Panel and Footwell Positions

1. Adjust the temperature control to the lowest setting.
2. Press the **A/C** and recirculated air buttons.
3. Adjust the fan speed to the highest setting initially and then adjust it to suit the desired comfort level.

HEATED WINDOWS AND MIRRORS

Heated Windows

Note: *Make sure the engine is running before operating the heated windows.*

Heated Rear Window

Press the button to clear the heated rear window of thin ice and fog. The heated rear window will automatically turn off after a short period of time. Start the engine before you switch the heated rear window on.

Note: *Do not use razor blades or other sharp objects to clean or remove decals from the inside of the heated rear window. The vehicle warranty does not cover damage caused to the heated rear window grid lines.*

Heated Exterior Mirrors

When you switch the heated rear window on, the heated exterior mirrors will automatically turn on.

Note: *Do not remove ice from the mirrors with a scraper or adjust the mirror glass when it is frozen in place.*

Note: *Do not clean the mirror housing or glass with harsh abrasives, fuel or other petroleum-based cleaning products.*

CABIN AIR FILTER

Your vehicle is equipped with a cabin air filter. It is located behind the center console.

The particulate filtration system reduces the concentration of airborne particles such as dust, spores and pollen in the air supplied to the interior of your vehicle.

2017 Fiesta (CCT) Canada/United States of America, HE8J 19A321 AB enUSA, Edition date: 201607, Second Printing

Note: *Make sure you have a cabin air filter installed at all times. This prevents foreign objects from entering the system. Running the system without a filter in place could result in degradation or damage to the system.*

The particulate filtration system gives you and your passengers the following benefits:

- It improves your driving comfort by reducing particle concentration.
- It improves the interior compartment cleanliness.
- It protects the climate control components from particle deposits.

Replace the filter at regular intervals. See **Scheduled Maintenance** (page 396).

For additional cabin air filter information, or to replace the filter, see an authorized dealer.

REMOTE START (If Equipped)

When you remote start your vehicle using a Ford Original Accessory remote start system, the engine shuts down if you do any of the following:

- Unlock your vehicle and open any door.
- Insert the key in the ignition.
- Press the brake pedal.

For more information, refer to the separate **Vehicle Security and Remote Start Systems Owner's Manual** provided with your vehicle or contact an authorized dealer.

2017 Fiesta (CCT) Canada/United States of America, HE8J 19A321 AB enUSA, Edition date: 201607, Second Printing

SITTING IN THE CORRECT POSITION

WARNINGS

Do not recline the seatback too far as this can cause the occupant to slide under the seatbelt, resulting in serious injury in the event of a collision.

Always sit upright against your seatback with your feet on the floor.

Do not place objects higher than the top of the seat backrest. Failure to follow this instruction could result in personal injury or death in the event of a sudden stop or crash.

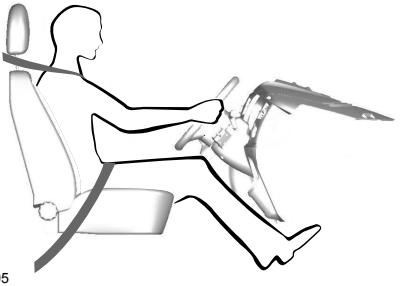

E68595

When you use them properly, the seat, head restraint, safety belt and airbags will provide optimum protection in the event of a crash.

We recommend that you follow these guidelines:

- Sit in an upright position with the base of your spine as far back as possible.
- Do not recline the seat backrest more than 30º.
- Adjust the head restraint so that the top of it is level with the top of your head and as far forward as possible. Make sure that you remain comfortable.
- Keep sufficient distance between yourself and the steering wheel. We recommend a minimum of 10 in (25 cm) between your breastbone and the airbag cover.
- Hold the steering wheel with your arms slightly bent.
- Bend your legs slightly so that you can press the pedals fully.
- Position the shoulder strap of the safety belt over the center of your shoulder and position the lap strap tightly across your hips.

Make sure that your driving position is comfortable and that you can maintain full control of your vehicle.

HEAD RESTRAINTS

WARNINGS

Fully adjust the head restraint before you sit in or operate your vehicle. This will help minimize the risk of neck injury in the event of a crash. Do not adjust the head restraint when your vehicle is moving.

The head restraint is a safety device. Whenever possible it should be installed and properly adjusted when the seat is occupied. Failure to adjust the head restraint properly could reduce its effectiveness during certain impacts.

Install the head restraint properly to help minimize the risk of neck injury in the event of a crash.

2017 Fiesta (CCT) Canada/United States of America, HE8J 19A321 AB enUSA, Edition date: 201607, Second Printing

Note: *Adjust the seat backrest to an upright driving position before adjusting the head restraint. Adjust the head restraint so that the top of it is level with the top of your head and as far forward as possible. Make sure that you remain comfortable. If you are extremely tall, adjust the head restraint to its highest position.*

Front seat head restraint

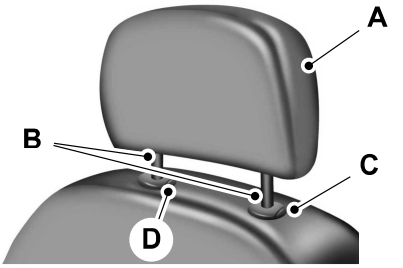

E138642

Rear seat outboard head restraints

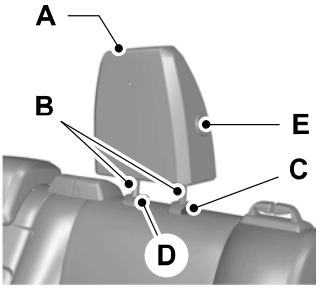

E138643

Rear seat center head restraint

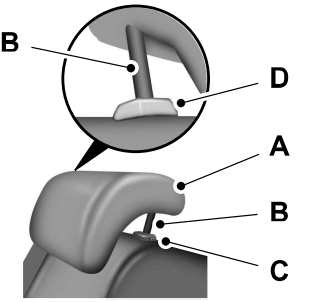

E138645

The head restraints consist of:

A	Energy absorbing head restraint.
B	Steel stems.
C	Guide sleeve adjust and unlock button.
D	Guide sleeve unlock and remove button.
E	Tilt button.

Adjusting the Head Restraint

Raising the Head Restraint

Pull the head restraint up.

Lowering the Head Restraint

1. Press and hold button C.
2. Push the head restraint down.

Folding the Head Restraint

1. Press and hold button E.
2. Pull the head restraint back up to reset.

Removing the Head Restraint

1. Pull the head restraint up until it reaches its highest position.
2. Press and hold buttons C and D.
3. Pull the head restraint up.

2017 Fiesta (CCT) Canada/United States of America, HE8J 19A321 AB enUSA, Edition date: 201607, Second Printing

Installing the Head Restraint

Align the steel stems into the guide sleeves and push the head restraint down until it locks.

MANUAL SEATS

WARNING

Do not adjust the driver seat when your vehicle is moving.

Moving the Seat Backward and Forward

WARNING

Rock the seat backward and forward after releasing the lever to make sure that it is fully engaged in its catch. A seat which is not fully engaged in its catch could move when your vehicle is moving. This may result in the loss of control of your vehicle, serious personal injury or death.

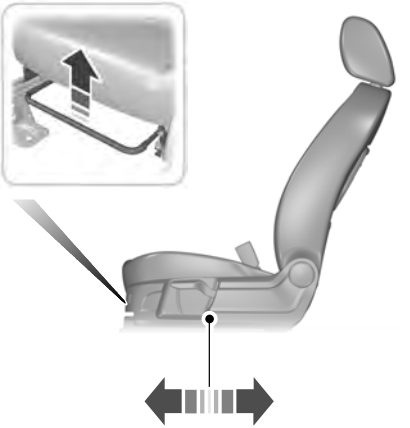

E147926

Adjusting the Lumbar Support (If Equipped)

E142199

Adjusting the Height of the Driver Seat

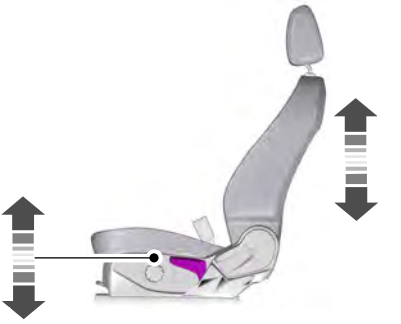

E70730

2017 Fiesta (CCT) Canada/United States of America, HE8J 19A321 AB enUSA, Edition date: 201607, Second Printing

Recline Adjustment

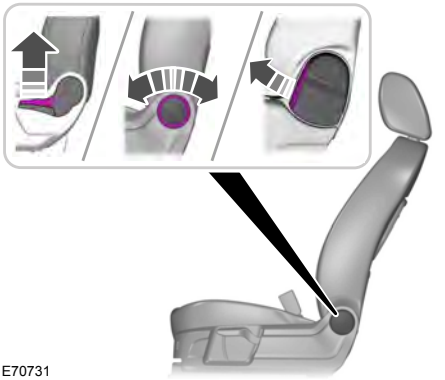

E70731

REAR SEATS

Folding the Seatback

WARNING

When folding the seatback down, take care not to get your hands caught between the seatback and the frame, catches or mechanism. Failure to take care may result in personal injury.

Note: *Fully lower the head restraints. Your vehicle may have folding rear head restraints. Fold these before you fold the seatback. See* ***Head Restraints*** *(page 103).*

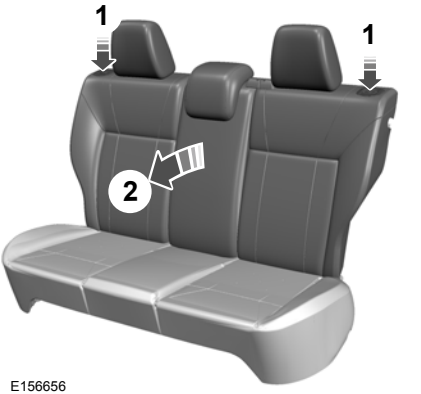

E156656

1. Press the unlock buttons down and hold them there.
2. Push the seatback forward.

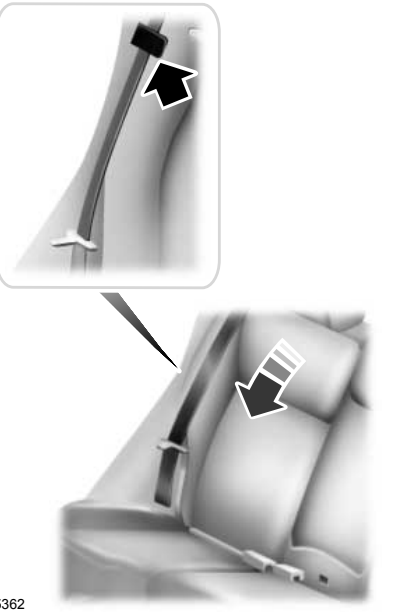

E165362

2017 Fiesta (CCT) Canada/United States of America, HE8J 19A321 AB enUSA, Edition date: 201607, Second Printing

3. Stow the safety belt in the belt stowage clip. This prevents the safety belt from getting caught in the seat latch.

Note: *Do not attempt to fold the rear seat cushion forward.*

Unfolding the Seatback

WARNINGS

When unfolding the seatback up, take care not to get your hands caught between the seatback and the frame, catches or mechanism. Failure to take care may result in personal injury.

Make sure that any cargo or objects are not trapped behind the seatback. Make sure the safety belts are not trapped in any way when unfolding the seatback up. Failure of an occupant to be able to use a trapped safety belt increases the risk of serious personal injury or death.

Make sure that the seatback is fully engaged in its catch. A seatback which is not fully engaged in its catch could move in the event of an accident. This may result in serious personal injury or death.

HEATED SEATS

WARNINGS

People who are unable to feel pain to their skin because of advanced age, chronic illness, diabetes, spinal cord injury, medication, alcohol or drug use, exhaustion or other physical conditions, must exercise extreme care when using the heated seat. The heated seat may cause burns even at low temperatures, especially if used for long periods of time. An overheated seat may cause serious personal injury.

WARNINGS

Do not place anything on the seat that insulates against heat, for example; blankets or cushions. This may cause the heated seat to overheat. An overheated seat may cause serious personal injury.

Do not puncture the seat with any sharp objects. This may damage the heating element which may cause the heated seat to overheat. An overheated seat may cause serious personal injury.

Do not place heavy objects on the seat. This may damage the heating element which may cause the heated seat to overheat. An overheated seat may cause serious personal injury.

Do not use the seat heater if any liquid is spilled on the seat. This may damage the heating element which may cause the heated seat to overheat. Allow the seat to dry thoroughly before reusing the seat heater. An overheated seat may cause serious personal injury.

Note: *The heated seats include both a heated seat cushion and heated seatback.*

E156657

2017 Fiesta (CCT) Canada/United States of America, HE8J 19A321 AB enUSA, Edition date: 201607, Second Printing

Press the required switch to turn the seat heating on. The lamp inside the switch will illuminate. Press the switch again to turn the seat heating off.

The seat heaters will only turn on with the ignition turned on.

Note: *You should avoid using the seat heaters unless the engine is running. Using the seat heaters without the engine running could drain your vehicle battery.*

The heated seat will remain turned on until either the heated seat switch or the ignition is turned off.

2017 Fiesta (CCT) Canada/United States of America, HE8J 19A321 AB enUSA, Edition date: 201607, Second Printing

12 Volt DC Power Point

WARNINGS

Do not plug optional electrical accessories into the cigar lighter socket. Incorrect use of the cigar lighter can cause damage not covered by the vehicle warranty, and can result in fire or serious injury.

Incorrect use of the power points can cause damage not covered by the vehicle warranty, and can result in fire or serious injury.

Note: *When you switch the ignition on, you can use the socket to power 12 volt appliances with a maximum current rating of 15 amps.*

If the power supply does not work after you switch the ignition off, switch the ignition on.

Note: *Do not insert objects other than an accessory plug into the power point. This will damage the outlet and blow the fuse.*

Note: *Do not hang any accessory from the accessory plug.*

Note: *Do not use the power point over the vehicle capacity of 12 volt DC 180 watts or a fuse may blow.*

Note: *Do not use a power point for operating a cigar lighter.*

Note: *Always keep the power point caps closed when not in use.*

Note: *Using the auxiliary power point to charge a USB device could result in audio system interference.*

Run the vehicle for full capacity use of the power point.

To prevent the battery from running out of charge:

- Do not use the power point longer than necessary when the vehicle is not running.
- Do not leave devices plugged in overnight or when you park your vehicle for extended periods.

Location

Power points may be in the following locations:

- On the center console.
- On the rear of the center console.

CIGAR LIGHTER (If Equipped)

WARNING

Do not plug optional electrical accessories into the cigar lighter socket. Incorrect use of the cigar lighter can cause damage not covered by the vehicle warranty, and can result in fire or serious injury.

Note: *Do not hold the cigar lighter element pressed in.*

Note: *If the power supply does not work after you switch the ignition off, switch the ignition on.*

Note: *If you use the socket when the engine is not running, the battery may lose charge.*

Note: *When you switch the ignition on, you can use the socket to power 12 volt appliances with a maximum current rating of 15 amps.*

2017 Fiesta (CCT) Canada/United States of America, HE8J 19A321 AB enUSA, Edition date: 201607, Second Printing

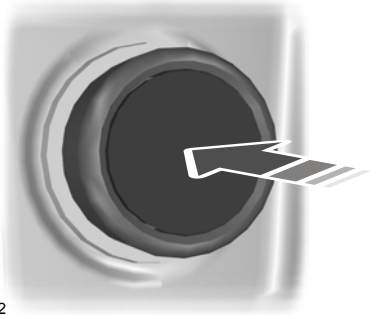

E103382

Press the element in to use the cigar lighter. It will pop out automatically.

2017 Fiesta (CCT) Canada/United States of America, HE8J 19A321 AB enUSA, Edition date: 201607, Second Printing

CENTER CONSOLE

Stow items in the cup holder carefully as items may become loose during hard braking, acceleration or crashes, including hot drinks which may spill.

Available console features include:

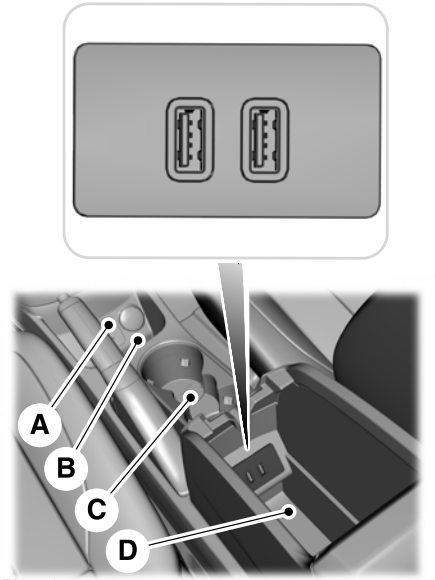

E205442

A	Card holder or auxiliary power point.
B	110 volt auxiliary power point.
C	Cup holders.
D	Storage compartment with two USB ports.

OVERHEAD CONSOLE

E131605

Press near the rear edge of the door to open it.

2017 Fiesta (CCT) Canada/United States of America, HE8J 19A321 AB enUSA, Edition date: 201607, Second Printing

GENERAL INFORMATION

WARNINGS

Extended idling at high engine speeds can produce very high temperatures in the engine and exhaust system, creating the risk of fire or other damage.

Do not park, idle or drive your vehicle on dry grass or other dry ground cover. The emission system heats up the engine compartment and exhaust system, creating the risk of fire.

Do not start the engine in a closed garage or in other enclosed areas. Exhaust fumes can be toxic. Always open the garage door before you start the engine.

Exhaust leaks may result in entry of harmful and potentially lethal fumes into the passenger compartment. If you smell exhaust fumes inside your vehicle, have your vehicle inspected immediately. Do not drive if you smell exhaust fumes.

If you disconnect the battery, your vehicle may exhibit some unusual driving characteristics for approximately 5 mi (8 km) after you reconnect it. This is because the engine management system must realign itself with the engine. You can disregard any unusual driving characteristics during this period.

The powertrain control system meets all Canadian interference-causing equipment standard requirements regulating the impulse electrical field or radio noise.

When you start the engine, avoid pressing the accelerator pedal before and during operation. Only use the accelerator pedal when you have difficulty starting the engine.

IGNITION SWITCH

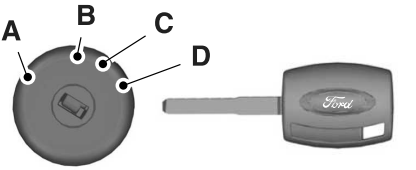

E180794

A (off) - The ignition is off.

Note: *When you switch the ignition off and leave your vehicle, do not leave your key in the ignition. This could cause your vehicle battery to lose charge.*

Note: *To switch the engine off when your vehicle is moving, move the transmission selector lever to position **N**. Use the brakes to bring the vehicle to a safe stop. After your vehicle has stopped, switch the engine off and move the transmission selector lever to position **P**. Turn the key to position **A** or **B**.*

B (accessory) - Allows the electrical accessories such as the radio to operate while the engine is not running.

Note: *Do not leave the ignition key in this position for too long. This could cause your vehicle battery to lose charge.*

C (on) - All electrical circuits operational. Warning lamps and indicators illuminate.

D (start) - cranks the engine. Release the key as soon as the engine starts.

KEYLESS STARTING (If Equipped)

WARNING

The system may not function if the key is close to metal objects or electronic devices such as cell phones.

2017 Fiesta (CCT) Canada/United States of America, HE8J 19A321 AB enUSA, Edition date: 201607, Second Printing

Note: *The ignition will automatically switch off when you leave your vehicle unattended. This is to prevent your vehicle battery running out of charge.*

Note: *A valid key must be located inside your vehicle to switch the ignition on and start the engine.*

Ignition On

Press the START button once. It is located on the instrument panel near the steering wheel. All electrical circuits and accessories are operational and the warning lamps and indicators will illuminate.

E142555

Starting with Manual Transmission

Note: *Releasing the clutch pedal while the engine is starting will stop the engine cranking and return to ignition on.*

1. Fully depress the clutch pedal.
2. Briefly press the button.

Starting with Automatic Transmission

Note: *Releasing the brake pedal while the engine is starting will stop the engine cranking and return to ignition on.*

1. Move the transmission selector lever to position P or N.
2. Fully depress the brake pedal.
3. Briefly press the button.

Failure to Start

All Vehicles

The system will not function if:

- The key frequencies are jammed.
- The key battery has no charge.

If you are unable to start your vehicle, do the following.

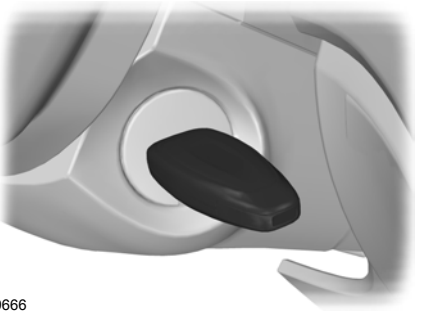

E99666

1. Hold the key next to the steering column exactly as shown.
2. With the key in this position you can use the button to switch the ignition on and start your engine.

Manual Transmission

Note: *Releasing the clutch pedal while the engine is starting will stop the engine cranking and return to ignition on. A message will be shown in the display.*

2017 Fiesta (CCT) Canada/United States of America, HE8J 19A321 AB enUSA, Edition date: 201607, Second Printing

If the engine does not crank when the clutch pedal has been fully depressed and the button is pressed:

1. Fully depress both the clutch and brake pedals.
2. Press the button until the engine starts.

Stopping the Engine with Your Vehicle Stationary

Note: *The ignition, all electrical circuits warning lamps and indicators will be switched off.*

Manual Transmission

Briefly press the button.

Automatic Transmission

1. Move the transmission selector lever to position P.
2. Press the button.

Stopping the Engine When Your Vehicle is Moving

WARNING

Switching off the engine when the vehicle is still moving will result in a loss of brake and steering assistance. The steering will not lock, but higher effort will be required. With the ignition switched off some electrical circuits, warning lamps and indicators may also be off.

1. Press and hold the button for at least one second or press it three times within two seconds.
2. Move the transmission selector lever to position N and use the brakes to bring your vehicle to a safe stop.
3. When your vehicle has stopped, move the transmission selector lever to position P or N and switch the ignition off.

STARTING A GASOLINE ENGINE

Note: *You can only operate the starter for a limited period, for example 10 seconds. The number of start attempts is limited to approximately six. If you exceed this limit, the system does not allow you to try again until some time has elapsed, for example 30 minutes.*

When you start the engine, the idle speed increases, this helps to warm up the engine. If the engine idle speed does not slow down automatically, have your vehicle checked by an authorized dealer.

Before starting the engine, check the following:

- Make sure all occupants have fastened their safety belts.
- Make sure the headlamps and electrical accessories are off.
- Make sure to set the parking brake.
- Move the transmission selector lever to position **P** (automatic transmission) or neutral (manual transmission).
- Turn the ignition key to position **C**. If your vehicle is equipped with a keyless ignition, see the following instructions.

Cold or Hot Engine

Vehicles with Manual Transmission

Note: *Do not touch the accelerator pedal.*

Note: *Releasing the clutch pedal while the engine is starting stops the engine cranking and returns the ignition to on.*

1. Fully depress the clutch pedal.
2. Start the engine.

Vehicles with Automatic Transmission

Note: *Do not touch the accelerator pedal.*

2017 Fiesta (CCT) Canada/United States of America, HE8J 19A321 AB enUSA, Edition date: 201607, Second Printing

1. Move the transmission selector lever to position **P** or **N**.
2. Start the engine.

All Vehicles

If the engine does not start within 10 seconds, wait for a short period and try again.

If the engine does not start after three attempts, wait 10 seconds and follow the flooded engine procedure.

If you have difficulty starting the engine when the temperature is below -13ºF (-25ºC), press the accelerator pedal to the mid-way point of its travel and try again.

Flooded Engine

Vehicles with Manual Transmission

1. Fully depress the clutch pedal.
2. Fully depress the accelerator pedal and hold it there.
3. Start the engine.

Vehicles with Automatic Transmission

1. Move the transmission selector lever to position **P** or **N**.
2. Fully depress the accelerator pedal and hold it there.
3. Start the engine.

All Vehicles

If the engine does not start, repeat the cold or hot engine procedure.

Engine Idle Speed after Starting

The speed at which the engine idles immediately after starting minimizes vehicle emissions and maximizes cabin comfort and fuel economy.

The idle speed varies depending on certain factors. These include vehicle component and ambient temperatures as well as electrical and climate system demands.

Failure to Start

Vehicles with Manual Transmission

If the engine does not crank when you fully depress the clutch pedal and turn the ignition key to position **D**:

1. Fully depress the clutch and brake pedals.
2. Turn the key to position **D** until the engine has started.

SWITCHING OFF THE ENGINE

Vehicles With a Turbocharger

WARNING

Do not switch the engine off when it is running at high speed. If you do, the turbocharger will continue running after the engine oil pressure has dropped to zero. This will lead to premature turbocharger bearing wear.

Release the accelerator pedal. Wait until the engine has reached idle speed and then switch it off.

ENGINE BLOCK HEATER (If Equipped)

WARNINGS

Failure to follow engine block heater instructions could result in property damage or serious personal injury.

Do not use your heater with ungrounded electrical systems or two-pronged adapters. There is a risk of electrical shock.

2017 Fiesta (CCT) Canada/United States of America, HE8J 19A321 AB enUSA, Edition date: 201607, Second Printing

WARNINGS

Do not fully close the hood, or allow it to drop under its own weight when using the engine block heater. This could damage the power cable and may cause an electrical short resulting in fire, injury and property damage.

Note: *The heater is most effective when outdoor temperatures are below 0ºF (-18ºC).*

The heater acts as a starting aid by warming the engine coolant. This allows the climate control system to respond quickly. The equipment includes a heater element (installed in the engine block) and a wire harness. You can connect the system to a grounded 120-volt AC electrical source.

We recommend that you do the following for a safe and correct operation:

- Use a 16-gauge outdoor extension cord that is product certified by Underwriter's Laboratory (UL) or Canadian Standards Association (CSA). This extension cord must be suitable for use outdoors, in cold temperatures, and be clearly marked Suitable for Use with Outdoor Appliances. Do not use an indoor extension cord outdoors. This could result in an electric shock or become a fire hazard.
- Use as short an extension cord as possible.
- Do not use multiple extension cords.
- Make sure that when in operation, the extension cord plug and heater cord plug connections are free and clear of water. This could cause an electric shock or fire.
- Make sure your vehicle is parked in a clean area, clear of combustibles.
- Make sure the heater, heater cord and extension cord are firmly connected.
- Check for heat anywhere in the electrical hookup once the system has been operating for approximately 30 minutes.
- Make sure the system is unplugged and properly stowed before starting and driving your vehicle. Make sure the protective cover seals the prongs of the block heater cord plug when not in use.
- Make sure the heater system is checked for proper operation before winter.

Using the Engine Block Heater

Make sure the receptacle terminals are clean and dry prior to use. Clean them with a dry cloth if necessary.

The heater uses 0.4 to 1.0 kilowatt-hours of energy per hour of use. The system does not have a thermostat. It achieves maximum temperature after approximately three hours of operation. Using the heater longer than three hours does not improve system performance and unnecessarily uses electricity.

2017 Fiesta (CCT) Canada/United States of America, HE8J 19A321 AB enUSA, Edition date: 201607, Second Printing

SAFETY PRECAUTIONS

WARNINGS

Do not overfill the fuel tank. The pressure in an overfilled tank may cause leakage and lead to fuel spray and fire.

The fuel system may be under pressure. If you hear a hissing sound near the fuel filler inlet, do not refuel until the sound stops. Otherwise, fuel may spray out, which could cause serious personal injury.

Fuels can cause serious injury or death if misused or mishandled.

Fuel may contain benzene, which is a cancer-causing agent.

When refueling always shut the engine off and never allow sparks or open flames near the fuel tank filler valve. Never smoke or use a cell phone while refueling. Fuel vapor is extremely hazardous under certain conditions. Avoid inhaling excess fumes.

Follow these guidelines when refueling:

- Extinguish all smoking materials and any open flames before refueling your vehicle.
- Always switch the engine off before refueling.
- Automotive fuels can be harmful or fatal if swallowed. Fuel is highly toxic and if swallowed can cause death or permanent injury. If fuel is swallowed immediately call a physician, even if no symptoms are immediately apparent. The toxic effects of fuel may not be apparent for hours.
- Avoid inhaling fuel vapors. Inhaling fuel vapor can lead to eye and respiratory tract irritation. In severe cases, excessive or prolonged breathing of fuel vapor can cause serious illness and permanent injury.
- Avoid getting fuel in your eyes. If you splash fuel in your eyes, immediately remove contact lenses (if worn), flush with water for 15 minutes and seek medical attention. Failure to seek proper medical attention could lead to permanent injury.
- Fuels can be harmful if absorbed through the skin. If you splash fuel on your skin, clothing or both, promptly remove contaminated clothing and thoroughly wash your skin with soap and water. Repeated or prolonged skin contact causes skin irritation.
- Be particularly careful if you are taking Antabuse or other forms of Disulfiram for the treatment of alcoholism. Breathing fuel vapors could cause an adverse reaction, serious personal injury or sickness. Immediately call a physician if you experience any adverse reactions.

FUEL QUALITY

Choosing the Right Fuel

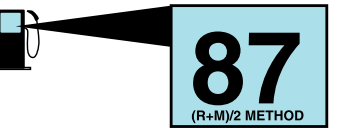

E161513

Your vehicle is designed to operate on regular unleaded gasoline with a minimum pump (R+M)/2 octane rating of 87.

2017 Fiesta (CCT) Canada/United States of America, HE8J 19A321 AB enUSA, Edition date: 201607, Second Printing

Some fuel stations, particularly those in high altitude areas, offer fuels posted as regular unleaded gasoline with an octane rating below 87. We do not recommend these fuels.

For best overall vehicle and engine performance, premium fuel with an octane rating of 91 or higher is recommended. The performance gained by using premium fuel is most noticeable in hot weather as well as other conditions, for example when towing a trailer. See **Towing** (page 155).

Do not use any fuel other than those recommended because they could lead to engine damage that will not be covered by the vehicle Warranty.

Note: *Use of any fuel other than those recommended can impair the emission control system and cause a loss of vehicle performance.*

Do not use:

- Diesel fuel.
- Fuels containing kerosene or paraffin.
- Fuel containing more than 15% ethanol or E85 fuel.
- Fuels containing methanol.
- Fuels containing metallic-based additives, including manganese-based compounds.
- Fuels containing the octane booster additive, methylcyclopentadienyl manganese tricarbonyl (MMT).
- Leaded fuel (using leaded fuel is prohibited by law).

The use of fuels with metallic compounds such as methylcyclopentadienyl manganese tricarbonyl (commonly known as MMT), which is a manganese-based fuel additive, will impair engine performance and affect the emission control system.

Do not be concerned if the engine sometimes knocks lightly. However, if the engine knocks heavily while using fuel with the recommended octane rating, contact an authorized dealer to prevent any engine damage.

FUEL FILLER FUNNEL LOCATION

The fuel filler funnel is in the spare wheel storage tray.

RUNNING OUT OF FUEL

Running out of fuel can cause damage not covered by the vehicle Warranty.

If your vehicle runs out of fuel:

- Add a minimum of 1.3 gal (5 L) of fuel to restart the engine.
- You may need to switch the ignition from off to on several times after refueling to allow the fuel system to pump the fuel from the tank to the engine. When restarting, cranking time takes a few seconds longer than normal.

Note: *If your vehicle is on a steep slope, more fuel may be required.*

Filling a Portable Fuel Container

WARNING

Flow of fuel through a fuel pump nozzle can produce static electricity. This can cause a fire if you are filling an ungrounded fuel container.

2017 Fiesta (CCT) Canada/United States of America, HE8J 19A321 AB enUSA, Edition date: 201607, Second Printing

Use the following guidelines to avoid electrostatic charge build-up, which can produce a spark, when filling an ungrounded fuel container:

- Only use an approved fuel container to transfer fuel to your vehicle. Place the container on the ground when filling it.
- Do not fill a fuel container when it is inside your vehicle (including the cargo area).
- Keep the fuel pump nozzle in contact with the fuel container when filling it.
- Do not use a device that holds the fuel pump nozzle lever in the fill position.

Adding Fuel From a Portable Fuel Container

WARNINGS

Do not insert the nozzle of a fuel container or an aftermarket funnel into the fuel filler neck. This may damage the fuel system filler neck or its seal and cause fuel to run onto the ground.

Do not try to pry open or push open the capless fuel system with foreign objects. This could damage the fuel system and its seal and cause injury to you or others.

Do not dispose of fuel in the household refuse or the public sewage system. Use an authorized waste disposal facility.

When refueling the vehicle fuel tank from a fuel container, use the fuel filler funnel included with your vehicle. See **Fuel Filler Funnel Location** (page 118).

Note: *Do not use aftermarket funnels as they may not work with the capless fuel system and can damage it.*

When refueling the vehicle fuel tank from a fuel container, do the following:

1. Fully open the fuel filler door.
2. Fully insert the fuel filler funnel into the fuel filler inlet.

E157452

3. Add fuel to your vehicle from the fuel container.
4. Remove the fuel filler funnel.
5. Fully close the fuel filler door.
6. Clean the fuel filler funnel and place it back in your vehicle or correctly dispose of it.

Note: *Extra funnels can be purchased from an authorized dealer if you choose to dispose of the funnel.*

CATALYTIC CONVERTER

WARNING

Do not park or idle your vehicle over dry leaves, dry grass or other combustible materials. The exhaust will radiate a considerable amount of heat during use, and after you have switched the engine off. This is a potential fire hazard.

2017 Fiesta (CCT) Canada/United States of America, HE8J 19A321 AB enUSA, Edition date: 201607, Second Printing

Driving with a Catalytic Converter

WARNINGS

Avoid running out of fuel.

Do not crank the engine for long periods.

Do not run the engine when a spark plug lead is disconnected.

Do not push-start or tow-start your vehicle. Use booster cables. See **Jump Starting the Vehicle** (page 162).

Do not switch the ignition off when driving.

REFUELING

WARNINGS

When refueling always shut the engine off and never allow sparks or open flames near the fuel tank filler valve. Never smoke or use a cell phone while refueling. Fuel vapor is extremely hazardous under certain conditions. Avoid inhaling excess fumes.

The fuel system may be under pressure. If you hear a hissing sound near the fuel filler inlet, do not refuel until the sound stops. Otherwise, fuel may spray out, which could cause serious personal injury.

Do not remove the fuel pump nozzle from its fully inserted position when refueling.

Do not overfill the fuel tank. The pressure in an overfilled tank may cause leakage and lead to fuel spray and fire.

WARNINGS

Stop refueling when the fuel pump nozzle automatically shuts off for the first time. Failure to follow this will fill the expansion space in the fuel tank and could lead to fuel overflowing.

Wait at least 10 seconds before removing the fuel pump nozzle to allow any residual fuel to drain into the fuel tank.

Do not try to pry open or push open the capless fuel system with foreign objects. This could damage the fuel system and its seal and cause injury to you or others.

Note: *Your vehicle does not have a fuel filler cap.*

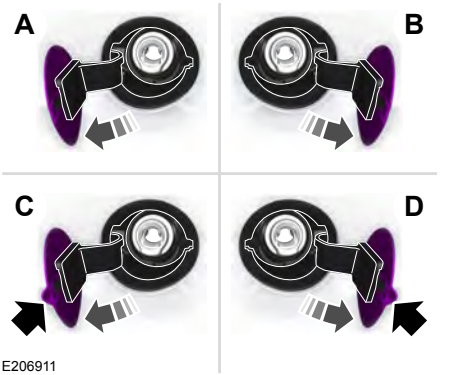

A Left-hand side. To open the fuel filler door, press the center rear edge of the fuel filler door and then release.

B Right-hand side. To open the fuel filler door, press the center rear edge of the fuel filler door and then release.

2017 Fiesta (CCT) Canada/United States of America, HE8J 19A321 AB enUSA, Edition date: 201607, Second Printing

C Left-hand side. Pull the rear of the fuel filler door to open it.

D Right-hand side. Pull the rear of the fuel filler door to open it.

1. Fully open the fuel filler door.

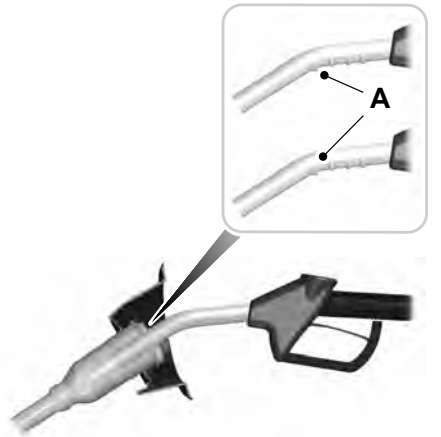

E139202

Note: *When you insert the correct size fuel pump nozzle a spring loaded inhibitor opens.*

2. Insert the fuel pump nozzle up to the first notch on the nozzle A. Keep it resting on the cover of the fuel tank filler pipe opening.

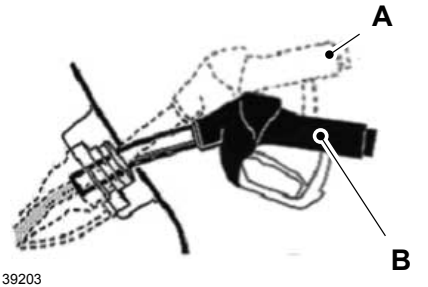

E139203

3. Hold the fuel pump nozzle in position B when refueling. Holding the fuel nozzle in position A can affect the flow of fuel and shut off the fuel nozzle before the fuel tank is full.

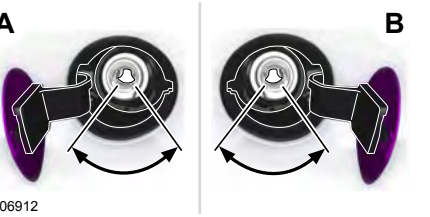

E206912

4. Operate the fuel pump nozzle within the area shown.

E119081

5. When you finish refueling slightly raise the fuel pump nozzle and slowly remove it.
6. Fully close the fuel filler door.

Note: *Do not attempt to start the engine if you have filled the fuel tank with incorrect fuel. Incorrect fuel use can cause damage not covered by the vehicle Warranty. Have your vehicle immediately checked.*

System Warnings (If Equipped)

If the fuel filler inlet does not fully close a warning message appears in the information display.

1. Stop your vehicle as soon as it is safe to do so and switch the engine off.
2. Shift into park (P) or neutral (N).
3. Apply the parking brake.

2017 Fiesta (CCT) Canada/United States of America, HE8J 19A321 AB enUSA, Edition date: 201607, Second Printing

4. Fully open the fuel filler door.
5. Check the fuel filler inlet and the area around it for any items or debris that may be obstructing its movement.
6. Fully insert a fuel pump nozzle or the fuel filler funnel provided with your vehicle into the fuel filler inlet. This action should dislodge any debris that may be preventing the fuel filler inlet from fully closing.
7. Fully close the fuel filler door.

Note: *If this action corrects the problem the message may not immediately reset. If the message remains and a warning lamp illuminates, have your vehicle checked as soon as possible.*

FUEL CONSUMPTION

The advertised capacity is the maximum amount of fuel that you can add to the fuel tank after running out of fuel. Included in the advertised capacity is an empty reserve. The empty reserve is an unspecified amount of fuel that remains in the fuel tank when the fuel gauge indicates empty.

Note: *The amount of fuel in the empty reserve varies and should not be relied upon to increase driving range.*

Filling the Fuel Tank

For consistent results when refueling:

- Turn the ignition off before fueling; an inaccurate reading results if the engine is left running.
- Use the same fill rate (low-medium-high) each time the tank is filled.
- Allow no more than one automatic shut-off when refueling.

Results are most accurate when the filling method is consistent.

Calculating Fuel Economy

Do not measure fuel economy during the first 1,000 mi (1,600 km) of driving (this is your engine's break-in period). A more accurate measurement is obtained after 2,000 mi (3,200 km) to 3,000 mi (4,800 km). Also, fuel expense, frequency of fill ups or fuel gauge readings are not accurate ways to measure fuel economy.

1. Fill the fuel tank completely and record the initial odometer reading.
2. Each time you fill the fuel tank, record the amount of fuel added.
3. After at least three fill ups, fill the fuel tank and record the current odometer reading.
4. Subtract your initial odometer reading from the current odometer reading.

To calculate L/100 km (liters per 100 kilometers) fuel consumption, multiply the liters used by 100, then divide by kilometers traveled. To calculate MPG (miles per gallon) fuel consumption, divide miles traveled by gallons used.

Keep a record for at least one month and record the type of driving (city or highway). This provides an accurate estimate of your vehicle's fuel economy under current driving conditions. Keeping records during summer and winter will show how temperature impacts fuel economy.

Conditions

- Heavily loading your vehicle reduces fuel economy.
- Carrying unnecessary weight in your vehicle may reduce fuel economy.
- Adding certain accessories to your vehicle such as bug deflectors, rollbars or light bars, running boards and ski racks may reduce fuel economy.
- Using fuel blended with alcohol may lower fuel economy.

2017 Fiesta (CCT) Canada/United States of America, HE8J 19A321 AB enUSA, Edition date: 201607, Second Printing

- Fuel economy may decrease with lower temperatures.
- Fuel economy may decrease when driving short distances.
- You will get better fuel economy when driving on flat terrain than when driving on hilly terrain.

EMISSION CONTROL SYSTEM

WARNINGS

Do not park, idle or drive your vehicle on dry grass or other dry ground cover. The emission system heats up the engine compartment and exhaust system, creating the risk of fire.

Exhaust leaks may result in entry of harmful and potentially lethal fumes into the passenger compartment. If you smell exhaust fumes inside your vehicle, have your vehicle inspected immediately. Do not drive if you smell exhaust fumes.

Your vehicle has various emission control components and a catalytic converter that enables it to comply with applicable exhaust emission standards.

To make sure that the catalytic converter and other emission control components continue to work properly:

- Use only the specified fuel listed.
- Avoid running out of fuel.
- Do not turn off the ignition while your vehicle is moving, especially at high speeds.
- Have the items listed in scheduled maintenance information performed according to the specified schedule.

The scheduled maintenance items listed in scheduled maintenance information are essential to the life and performance of your vehicle and to its emissions system.

If you use anything other than Ford, Motorcraft or Ford-authorized parts for maintenance replacements or for service of components affecting emission control, such non-Ford parts should be equivalent to genuine Ford Motor Company parts in performance and durability.

Illumination of the service engine soon indicator, charging system warning light or the temperature warning light, fluid leaks, strange odors, smoke or loss of engine power could indicate that the emission control system is not working properly.

An improperly operating or damaged exhaust system may allow exhaust to enter the vehicle. Have a damaged or improperly operating exhaust system inspected and repaired immediately.

Do not make any unauthorized changes to your vehicle or engine. By law, vehicle owners and anyone who manufactures, repairs, services, sells, leases, trades vehicles, or supervises a fleet of vehicles are not permitted to intentionally remove an emission control device or prevent it from working. Information about your vehicle's emission system is on the Vehicle Emission Control Information Decal located on or near the engine. This decal also lists engine displacement.

Please consult your warranty information for complete details.

On-Board Diagnostics (OBD-II)

Your vehicle has a computer known as the on-board diagnostics system (OBD-II) that monitors the engine's emission control system. The system protects the environment by making sure that your vehicle continues to meet government emission standards. The OBD-II system also assists a service technician in properly servicing your vehicle.

2017 Fiesta (CCT) Canada/United States of America, HE8J 19A321 AB enUSA, Edition date: 201607, Second Printing

When the service engine soon indicator illuminates, the OBD-II system has detected a malfunction. Temporary malfunctions may cause the service engine soon indicator to illuminate. Examples are:

1. Your vehicle has run out of fuel—the engine may misfire or run poorly.
2. Poor fuel quality or water in the fuel—the engine may misfire or run poorly.
3. The fuel fill inlet may not have closed properly. See **Refueling** (page 120).
4. Driving through deep water—the electrical system may be wet.

You can correct these temporary malfunctions by filling the fuel tank with good quality fuel, properly closing the fuel fill inlet or letting the electrical system dry out. After three driving cycles without these or any other temporary malfunctions present, the service engine soon indicator should stay off the next time you start the engine. A driving cycle consists of a cold engine startup followed by mixed city and highway driving. No additional vehicle service is required.

If the service engine soon indicator remains on, have your vehicle serviced at the first available opportunity. Although some malfunctions detected by the OBD-II may not have symptoms that are apparent, continued driving with the service engine soon indicator on can result in increased emissions, lower fuel economy, reduced engine and transmission smoothness and lead to more costly repairs.

Readiness for Inspection and Maintenance (I/M) Testing

Some state and provincial and local governments may have Inspection/Maintenance (I/M) programs to inspect the emission control equipment on your vehicle. Failure to pass this inspection could prevent you from getting a vehicle registration.

If the service engine soon indicator is on or the bulb does not work, your vehicle may need service. See On-Board Diagnostics.

Your vehicle may not pass the I/M test if the service engine soon indicator is on or not working properly (bulb is burned out), or if the OBD-II system has determined that some of the emission control systems have not been properly checked. In this case, the vehicle is not ready for I/M testing.

If the vehicle's engine or transmission has just been serviced, or the battery has recently run down or been replaced, the OBD-II system may indicate that the vehicle is not ready for I/M testing. To determine if the vehicle is ready for I/M testing, turn the ignition key to the on position for 15 seconds without cranking the engine. If the service engine soon indicator blinks eight times, it means that the vehicle is not ready for I/M testing; if the service engine soon indicator stays on solid, it means that your vehicle is ready for I/M testing.

The OBD-II system checks the emission control system during normal driving. A complete check may take several days.

If the vehicle is not ready for I/M testing, you can perform the following driving cycle consisting of mixed city and highway driving:

2017 Fiesta (CCT) Canada/United States of America, HE8J 19A321 AB enUSA, Edition date: 201607, Second Printing

1. 15 minutes of steady driving on an expressway or highway followed by 20 minutes of stop-and-go driving with at least four 30-second idle periods.
2. Allow your vehicle to sit for at least eight hours with the ignition off. Then, start the vehicle and complete the above driving cycle. The vehicle must warm up to its normal operating temperature. Once started, do not turn off the vehicle until the above driving cycle is complete.

If the vehicle is still not ready for I/M testing, you need to repeat the above driving cycle.

2017 Fiesta (CCT) Canada/United States of America, HE8J 19A321 AB enUSA, Edition date: 201607, Second Printing

MANUAL TRANSMISSION

Using the Clutch

Note: *Failure to fully depress the clutch pedal to the floor may cause increased shift efforts, prematurely wear transmission components or damage the transmission.*

Note: *Do not drive with your foot resting on the clutch pedal or use the clutch pedal to hold your vehicle at a standstill while waiting on a hill. These actions will reduce the life of the clutch and could nullify a clutch warranty claim.*

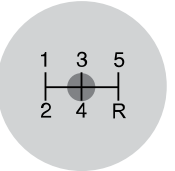

E157512

Manual transmission vehicles have a starter interlock that prevents cranking the engine unless the clutch pedal is fully depressed.

Starting Your Vehicle

WARNING

Always use floor mats that are designed to fit the foot well of your vehicle. Only use floor mats that leave the pedal area unobstructed. Only use floor mats that are firmly secured to retention posts so that they cannot slip out of position and interfere with the pedals or impair safe operation of your vehicle in other ways.

1. Make sure the parking brake is fully set and shift the gearshift lever to the neutral position.
2. Fully depress the clutch pedal then start the engine.
3. Press the brake pedal and shift the gearshift lever to first or reverse gear.
4. Release the parking brake and slowly release the clutch pedal while slowly pressing on the accelerator.

During each shift, make sure you fully depress the clutch pedal.

Recommended Shift Speeds

Note: *Do not shift the gearshift lever to first gear when your vehicle is moving faster than 15 mph (24 km/h). This will damage the clutch.*

We recommend you change gear according to the following guide to achieve the best fuel economy for your vehicle.

1.0L EcoBoost

Shift from	Recommended speed
1 - 2	15 mph (24 km/h)
2 - 3	25 mph (40 km/h)
3 - 4	40 mph (64 km/h)
4 - 5	45 mph (72 km/h)

1.6L TiVCT

Shift from	Recommended speed
1 - 2	15 mph (24 km/h)
2 - 3	24 mph (38 km/h)
3 - 4	32 mph (51 km/h)
4 - 5	44 mph (71 km/h)

2017 Fiesta (CCT) Canada/United States of America, HE8J 19A321 AB enUSA, Edition date: 201607, Second Printing

Reverse

Note: *Do not shift the gearshift lever to reverse gear when your vehicle is moving. This can cause damage to the transmission.*

1. Fully depress the clutch pedal to disengage clutch.
2. Shift the gearshift lever to the reverse position.

If reverse gear is not fully engaged, press the clutch pedal down and shift the gearshift lever to the neutral position. Release the clutch pedal for a moment, depress the clutch again and shift the gearshift lever to reverse.

Parking Your Vehicle

WARNING

Always set the parking brake fully and make sure you shift the gearshift lever to first gear. Switch the ignition off and remove the key whenever you leave your vehicle.

To park your vehicle:

1. Press the brake pedal and shift the gearshift lever to the neutral position.
2. Fully apply the parking brake and switch the ignition off.
3. Hold the clutch pedal down, and shift the gearshift lever to first gear.

AUTOMATIC TRANSMISSION

WARNINGS

Always set the parking brake fully and make sure the gearshift is latched in **P** (Park). Turn the ignition to the off position and remove the key whenever you leave your vehicle.

WARNINGS

Do not apply the brake and accelerator pedals simultaneously for more than three seconds as this limits engine rpm and labors the transmission. This may result in difficulty maintaining speed in traffic and could lead to serious injury.

Note: *When you switch the ignition off, the transmission will carry out a series of checks. You may hear slight clicking sounds. This is normal.*

We have designed your vehicle to improve fuel economy by reducing fuel usage compared to a traditional torque converter automatic transmission. When you take your foot off the accelerator pedal and your vehicle begins to slow down, this can feel like a light to medium braking sensation.

Selector Lever Positions

WARNING

You must press the brake pedal to apply the brakes before moving the transmission selector lever. Failure to keep the brakes applied until you are ready to move off may lead to an accident or injury.

2017 Fiesta (CCT) Canada/United States of America, HE8J 19A321 AB enUSA, Edition date: 201607, Second Printing

E161746

P	Park
R	Reverse
N	Neutral
D	Drive
S	Sport mode or manual shifting
+	Manual shift up
-	Manual shift down

Press the button on the front of the transmission selector lever to change to each position.

The transmission selector lever position will be shown in the information display.

P (Park)

WARNINGS

You must only select **P** when your vehicle is stationary. Selecting **P** when your vehicle is moving will damage the transmission and may lead to an accident or injury.

WARNINGS

You must move the transmission selector lever to position **P** and fully apply the parking brake before you leave your vehicle. Failure to leave your vehicle securely parked may lead to an accident or injury.

Your vehicle will not move while the transmission selector lever is in **P**. You can start the engine with the transmission selector lever in this position.

Note: *An audible warning will sound if you open the driver's door and you have not moved the transmission selector lever to park.*

R (Reverse)

WARNING

You must only select **R** when your vehicle is stationary and the engine is at idle speed. Selecting **R** when your vehicle is moving or at a high engine speed will damage the transmission or lead to an accident or injury.

With the transmission selector lever in **R**, power is transmitted to the drive wheels to allow your vehicle to move backward. You cannot start the engine with the transmission selector lever in this position.

Note: *Always come to a complete stop before shifting the transmission selector lever out of reverse.*

N (Neutral)

With the transmission selector lever in **N**, power is not transmitted to the drive wheels and the transmission is not locked, it is possible your vehicle will move if the brakes are not applied. You can start the engine with the transmission selector lever in this position.

2017 Fiesta (CCT) Canada/United States of America, HE8J 19A321 AB enUSA, Edition date: 201607, Second Printing

D (Drive)

With the transmission selector lever in **D**, your vehicle will shift automatically through the forward gears. You cannot start the engine with the transmission selector lever in this position.

The transmission will select the appropriate gear for optimum vehicle performance and economy based on ambient temperature, road gradient, vehicle load, speed and your driving style.

When you use Drive mode it provides a downshift function. See **Downshift** in this section.

Note: *A shift will occur only when your vehicle and engine speeds are appropriate.*

Sport Mode and Manual Shifting

Sport Mode

With the transmission selector lever in **S**, gears are selected quicker and at higher engine speeds. You cannot start the engine with the transmission selector lever in this position.

Sport mode will remain on until you either shift manually up or down the gears using the **+** or **-** buttons on the side of the transmission selector lever or you move the transmission selector lever to drive.

When you use Sport mode it provides a downshift function. See **Downshift** in this section.

Manual Shifting

WARNING

Do not permanently hold the **+** or **-** buttons in. This may damage the transmission and may lead to an accident or injury.

Press the **+** button to shift up and the **-** button to shift down.

Gears may be skipped by pressing the **+** or **-** buttons repeatedly at short intervals.

We recommend you upshift according to the following guide to achieve the best fuel economy for your vehicle.

Shift From	Recommended Speed
1 - 2	15 mph (24 km/h)
2 - 3	25 mph (40 km/h)
3 - 4	40 mph (64 km/h)
4 - 5	45 mph (72 km/h)
5 - 6	50 mph (80 km/h)

Manual mode also provides a downshift function. See **Downshift** in this section.

Note: *The transmission will automatically upshift if the engine speed is too high or downshift if the engine speed is too low.*

Hints on Driving with an Automatic Transmission

WARNINGS

Do not apply the brake and accelerator pedals simultaneously for more than three seconds as this limits engine rpm and labors the transmission. This may make it difficult to maintain speeds in traffic and lead to an accident or injury.

Do not idle the engine for long periods of time in **D** with the brakes applied. This could damage the transmission and may lead to an accident or injury.

Note: *The system carries out a series of checks when you switch the ignition on and off. You may hear clicking sounds. This is normal.*

2017 Fiesta (CCT) Canada/United States of America, HE8J 19A321 AB enUSA, Edition date: 201607, Second Printing

Moving off

1. Press the brake pedal to apply the brakes.
2. Move the transmission selector lever to **R**, **D** or **S**.
3. Release the parking brake.
4. Release the brake pedal and press the accelerator pedal.

Stopping

1. Release the accelerator pedal and press the brake pedal.
2. Apply the parking brake.
3. Move the transmission selector lever to **N** or **P**.

Downshift

Press the accelerator pedal fully with the transmission selector lever in either **D**, **S** mode or manual shifting position to select a lower gear for optimum performance. Release the accelerator pedal when you no longer require downshift.

If Your Vehicle Gets Stuck In Mud or Snow

If your vehicle gets stuck in mud or snow, it may be rocked out by shifting between **D** and **R**, stopping between shifts in a steady pattern. Press the accelerator lightly in each gear.

Note: *Do not rock your vehicle if the engine is not at normal operating temperature as this can damage the transmission.*

Note: *Do not rock your vehicle for more than a minute as this can damage the transmission or the tires and the engine may overheat.*

Emergency Park Position Release Lever

WARNINGS

Do not drive your vehicle until you verify that the brake lamps are working. Failure to adhere to warning indicators may lead to an accident or injury.

If you release the parking brake and the brake warning lamp remains illuminated the brakes may not be working correctly. Have your vehicle checked by an authorized dealer as soon as possible. Failure to adhere to warning lamps and indicators may lead to an accident or injury.

Use the emergency **P** position release lever to move the transmission selector lever from the **P** position in the event of a malfunction or if your vehicle battery has no charge.

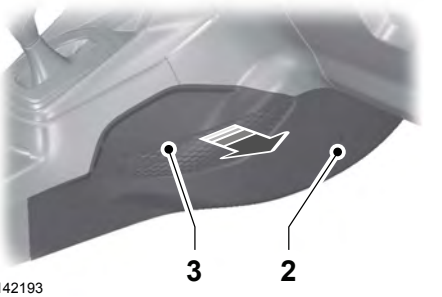

E142193

1. Apply the parking brake and switch the ignition off before carrying out this procedure.
2. Remove the retaining screw.
3. Remove the center console side panel.

2017 Fiesta (CCT) Canada/United States of America, HE8J 19A321 AB enUSA, Edition date: 201607, Second Printing

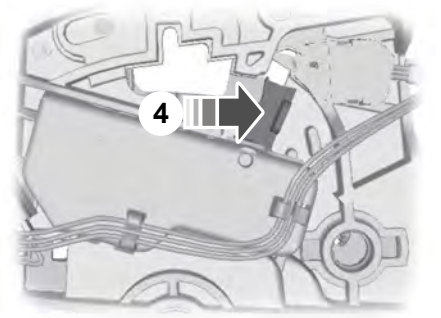

E142214

4. Press the brake pedal. Using a suitable tool rotate the lever forward while pulling the transmission selector lever out of the **P** position.

Note: *The emergency **P** position release lever is pink.*

Note: *See an authorized dealer as soon as possible if you use procedure.*

2017 Fiesta (CCT) Canada/United States of America, HE8J 19A321 AB enUSA, Edition date: 201607, Second Printing

GENERAL INFORMATION

WARNING

The system does not relieve you of your responsibility to drive with due care and attention.

Note: *Occasional brake noise is normal. If a metal-to-metal, continuous grinding or continuous squeal sound is present, the brake linings may be worn-out. If the vehicle has continuous vibration or shudder in the steering wheel while braking, have your vehicle checked by an authorized dealer.*

Note: *Brake dust may accumulate on the wheels, even under normal driving conditions. Some dust is inevitable as the brakes wear. See* ***Cleaning the Wheels*** *(page 216).*

Wet brakes result in reduced braking efficiency. Gently press the brake pedal a few times when driving from a car wash or standing water to dry the brakes.

Brake Over Accelerator

In the event that the accelerator pedal becomes stuck or entrapped, apply firm pressure to the brake pedal to slow your vehicle and reduce engine power. If you experience this condition, apply the brakes and bring your vehicle to a safe stop. Move the transmission to park (P), switch the engine off and apply the parking brake. Inspect the accelerator pedal for any interference. If none are found and the condition persists, have your vehicle towed to the nearest authorized dealer.

Emergency Brake Assist

Brake assist detects when you rapidly brake by measuring the rate at which you press the brake pedal. It provides maximum braking efficiency as long as you press the pedal. Emergency brake assist can reduce stopping distances in critical situations.

Anti-lock Brake System

This system helps you maintain steering control and vehicle stability during emergency stops by keeping the brakes from locking.

This lamp momentarily illuminates when you switch the ignition on. If the light does not illuminate during start up, remains on or flashes, the system may be disabled. Have the system checked by an authorized dealer. If the anti-lock brake system is disabled, normal braking is still effective.

If the brake warning lamp illuminates when you release the parking brake, have the system checked by an authorized dealer.

HINTS ON DRIVING WITH ANTI-LOCK BRAKES

The anti-lock braking system does not eliminate the risks when:

- You drive too closely to the vehicle in front of you.
- Your vehicle is hydroplaning.
- You take corners too fast.
- The road surface is poor.

Note: *If the system activates, the brake pedal may pulse and may travel further. Maintain pressure on the brake pedal. You may also hear a noise from the system. This is normal.*

2017 Fiesta (CCT) Canada/United States of America, HE8J 19A321 AB enUSA, Edition date: 201607, Second Printing

PARKING BRAKE

Vehicles With Automatic Transmission

WARNING

Always set the parking brake fully and leave your vehicle with the transmission selector lever in position P.

Note: *If you park your vehicle on a hill and facing uphill move the transmission selector lever to position P and turn the steering wheel away from the curb.*

Note: *If you park your vehicle on a hill and facing downhill move the transmission selector lever to position P and turn the steering wheel toward the curb.*

Vehicles With Manual Transmission

WARNING

Always set the parking brake fully.

Note: *If you park your vehicle on a hill and facing uphill select first gear and turn the steering wheel away from the curb.*

Note: *If you park your vehicle on a hill and facing downhill select reverse gear and turn the steering wheel toward the curb.*

All Vehicles

Note: *Do not press the release button while pulling the lever up.*

To apply the parking brake:

1. Press the foot brake pedal firmly.
2. Pull the parking brake lever up to its fullest extent.

To release the parking brake:

1. Press the brake pedal firmly.
2. Pull the lever up slightly.
3. Press the release button and push the lever down.

HILL START ASSIST (If Equipped)

WARNINGS

The system does not replace the parking brake. When you leave your vehicle, always apply the parking brake and shift the transmission into park (P) for automatic transmission or first gear for manual transmission.

You must remain in your vehicle when the system turns on. At all times, you are responsible for controlling your vehicle, supervising the system and intervening, if required. Failure to take care may result in the loss of control of your vehicle, serious personal injury or death.

The system turns off if there is a malfunction or if you excessively rev the engine.

The system makes it easier to pull away when your vehicle is on a slope without the need to use the parking brake.

When the system activates, your vehicle remains stationary on a slope for a few seconds after you release the brake pedal. This allows you time to move your foot from the brake to the accelerator pedal. The brakes release when the engine has developed sufficient torque to prevent your vehicle from rolling down the slope. This is an advantage when pulling away on a slope, for example from a car park ramp, traffic lights or when reversing uphill into a parking space.

The system activates on any slope that causes your vehicle to roll.

2017 Fiesta (CCT) Canada/United States of America, HE8J 19A321 AB enUSA, Edition date: 201607, Second Printing

Note: *There is no warning lamp to indicate the system is either on or off.*

Using Hill Start Assist

1. Press the brake pedal to bring your vehicle to a complete standstill. Keep the brake pedal pressed and shift into first gear when facing uphill or reverse (R) when facing downhill.
2. The system activates if the sensors detect that your vehicle is on a slope.
3. When you remove your foot from the brake pedal, your vehicle remains on the slope without rolling away for a few seconds. This hold time increases if you are in the process of driving off.
4. Pull away in the normal manner.

Switching the System On and Off

Vehicles with Manual Transmission

You can switch this feature on or off in the information display. The system remembers the last setting when you start your vehicle.

Vehicles with Automatic Transmission

The system turns on when you switch the ignition on and you cannot switch the system off.

2017 Fiesta (CCT) Canada/United States of America, HE8J 19A321 AB enUSA, Edition date: 201607, Second Printing

PRINCIPLE OF OPERATION

The traction control system helps avoid drive wheel spin and loss of traction.

If your vehicle begins to slide, the system applies the brakes to individual wheels and, when needed, reduces engine power at the same time. If the wheels spin when accelerating on slippery or loose surfaces, the system reduces engine power in order to increase traction.

USING TRACTION CONTROL

WARNING

The stability and traction control light illuminates steadily if the system detects a failure. Make sure you did not manually disable the traction control system using the information display controls or the switch. If the stability control and traction control light is still illuminating steadily, have the system serviced by an authorized dealer immediately. Operating your vehicle with the traction control disabled could lead to an increased risk of loss of vehicle control, vehicle rollover, personal injury and death.

The system automatically turns on each time you switch the ignition on.

If your vehicle is stuck in mud or snow, switching traction control off may be beneficial as this allows the wheels to spin.

Note: *When you switch traction control off, stability control remains fully active.*

Switching the System Off

When you switch the system off or on, a message appears in the information display showing system status.

You can switch the system off by either using the information display controls or the switch.

Using the Information Display Controls

You can switch this feature off or on in the information display. See **General Information** (page 86).

Using a Switch (If Equipped)

Use the traction control switch on the instrument panel to switch the system off or on.

System Indicator Lights and Messages

The stability and traction control light:

- Temporarily illuminates on engine start-up.
- Flashes when a driving condition activates either of the systems.
- Illuminates if a problem occurs in either of the systems.

The stability and traction control off light temporarily illuminates on engine start-up and stays on when you switch the traction control system off.

2017 Fiesta (CCT) Canada/United States of America, HE8J 19A321 AB enUSA, Edition date: 201607, Second Printing

PRINCIPLE OF OPERATION

Electronic Stability Program

WARNINGS

The system does not relieve you of your responsibility to drive with due care and attention. Failure to drive with due care and attention could lead to loss of vehicle control.

Vehicle modifications involving braking system, aftermarket roof racks, suspension, steering system, tire construction and wheel and tire size may change the handling characteristics of the vehicle and may adversely affect the performance of the AdvanceTrac system. In addition, installing any stereo loudspeakers may interfere with and adversely affect the AdvanceTrac system. Install any aftermarket stereo loudspeaker as far as possible from the front center console, the tunnel, and the front seats in order to minimize the risk of interfering with the AdvanceTrac sensors. Reducing the effectiveness of the AdvanceTrac system could lead to an increased risk of loss of vehicle control, vehicle rollover, personal injury and death.

Remember that even advanced technology cannot defy the laws of physics. It's always possible to lose control of a vehicle due to inappropriate driver input for the conditions. Aggressive driving on any road condition can cause you to lose control of your vehicle increasing the risk of personal injury or property damage. Activation of the AdvanceTrac system is an indication that at least some of the tires have exceeded their ability to grip the road; this could reduce the operator's ability to control the vehicle potentially resulting in a loss of vehicle control, vehicle rollover, personal injury and death. If your AdvanceTrac system activates, SLOW DOWN.

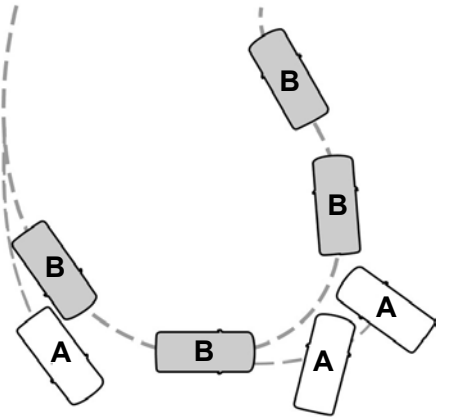

E72903

A Without Advance Trac

B With Advance Trac

The system supports stability when your vehicle starts to slide away from your intended path. This is performed by braking individual wheels and reducing engine torque as needed.

The system also provides an enhanced traction control function by reducing engine torque if the wheels spin when you accelerate. This improves your ability to pull away on slippery roads or loose surfaces, and improves comfort by limiting wheel spin in hairpin bends.

Stability Control Warning Lamp

While driving, it flashes when the system is operating. See **Warning Lamps and Indicators** (page 82).

2017 Fiesta (CCT) Canada/United States of America, HE8J 19A321 AB enUSA, Edition date: 201607, Second Printing

USING STABILITY CONTROL

Note: *The system automatically turns on each time you switch the ignition on.*

You can switch the traction control system off and on . See **Using Traction Control** (page 135).

2017 Fiesta (CCT) Canada/United States of America, HE8J 19A321 AB enUSA, Edition date: 201607, Second Printing

PRINCIPLE OF OPERATION

WARNINGS

To help avoid personal injury, please read and understand the limitations of the system as contained in this section. Sensing is only an aid for some (generally large and fixed) objects when moving on a flat surface at parking speeds. Certain objects with surfaces that absorb ultrasonic waves, surrounding vehicle's parking aid systems, traffic control systems, fluorescent lamps, inclement weather, air brakes, and external motors and fans may also affect the function of the sensing system. This may include reduced performance or a false activation.

Always drive with due care and attention when using and operating the controls and features on your vehicle.

Only use the Ford approved trailer wiring kit (including the trailer wiring module) when towing with your vehicle. Using generic trailer wiring kits may prevent the correct operation of the rear parking sensors (where fitted) and could damage the electrical systems of your vehicle.

The sensors may not detect objects in heavy rain or other conditions that cause interference.

The parking aid system may not prevent contact with small or moving objects that are close to the ground. The parking aid system gives an audible warning when it detects a large object helping to avoid damage to your vehicle. To help avoid personal injury you must take care when using the parking aid system.

Note: *If you use a high pressure spray to wash your vehicle, only spray the sensors briefly from a distance not less than 8 in (20 cm).*

Note: *If your vehicle has a tow ball arm, the system is turned off automatically when trailer lamps (or lighting boards) are connected to the 13-pin socket through a Ford approved trailer tow module.*

Note: *Keep the sensors free from dirt, ice or snow. Do not clean with sharp objects.*

Note: *The system may emit false alerts if it detects a signal using the same frequency as the sensors or if your vehicle is fully loaded.*

Note: *The outer sensors may detect the side walls of a garage. If the distance between the outer sensors and the side wall remains constant for three seconds, the alert will turn off. As you continue the inner sensors will detect objects directly behind your vehicle.*

Note: *If your vehicle sustains damage to the bumper or fascia, the sensing zone may be altered causing inaccurate measure of obstacles or false alerts.*

REAR PARKING AID

WARNINGS

To help avoid personal injury, please read and understand the limitations of the system as contained in this section. Sensing is only an aid for some (generally large and fixed) objects when moving on a flat surface at parking speeds. Certain objects with surfaces that absorb ultrasonic waves, surrounding vehicle's parking aid systems, traffic control systems, fluorescent lamps, inclement weather, air brakes, and external motors and fans may also affect the function of the sensing system. This may include reduced performance or a false activation.

To help avoid personal injury, always use caution when in reverse (R) and when using the sensing system.

2017 Fiesta (CCT) Canada/United States of America, HE8J 19A321 AB enUSA, Edition date: 201607, Second Printing

WARNINGS

The parking aid system may not prevent contact with small or moving objects that are close to the ground. The parking aid system gives an audible warning when it detects a large object helping to avoid damage to your vehicle. To help avoid personal injury you must take care when using the parking aid system.

Note: *Some add-on accessories such as large trailer hitches, bike or surfboard racks can cause reduced performance or false alerts.*

Note: *Keep the sensors free from snow, ice and large accumulations of dirt. Blocked sensors may affect system accuracy. Do not clean the sensors with sharp objects.*

Note: *If your vehicle sustains damage leaving the sensors misaligned, this will cause inaccurate measurements or false alerts.*

The system warns you of objects that are within the detection zone of the bumper areas.

When the parking aid system sounds a tone, the audio system may reduce the set volume. When the warning ends, the audio system will return to the previously set volume.

The rear parking aid sensors automatically turn on when you shift into reverse (R).

E130178

A Coverage area of up to 72 in (183 cm) from the bumper. There is decreased coverage area at the outer corners of the bumper.

As your vehicle moves closer an obstacle, the rate of the audible warning increases. When the obstacle is less than 12 in (30 cm) away, the audible warning sounds continuously. If a stationary or receding object is detected 12 in (30 cm) or more from the side of your vehicle, the audible warning sounds for only three seconds. Once the system detects an object approaching, the audible warning sounds again.

The system detects objects when you shift into reverse (R) and:

- Your vehicle is moving toward a stationary object at a speed of 3 mph (5 km/h) or less.
- Your vehicle is moving at a speed of 3 mph (5 km/h) or less, and an object is approaching your vehicle at a speed of 3 mph (5 km/h) or less.

If a fault is present in the system, a warning message appears in the information display and does not allow you to switch the system on.

2017 Fiesta (CCT) Canada/United States of America, HE8J 19A321 AB enUSA, Edition date: 201607, Second Printing

FRONT PARKING AID (If Equipped)

WARNINGS

To help avoid personal injury, please read and understand the limitations of the system as contained in this section. Sensing is only an aid for some (generally large and fixed) objects when moving on a flat surface at parking speeds. Certain objects with surfaces that absorb ultrasonic waves, surrounding vehicle's parking aid systems, traffic control systems, fluorescent lamps, inclement weather, air brakes, and external motors and fans may also affect the function of the sensing system. This may include reduced performance or a false activation.

To help avoid personal injury, always use caution when in reverse (R) and when using the sensing system.

The parking aid system may not prevent contact with small or moving objects that are close to the ground. The parking aid system gives an audible warning when it detects a large object helping to avoid damage to your vehicle. To help avoid personal injury you must take care when using the parking aid system.

Note: *Keep the sensors free from snow, ice and large accumulations of dirt. Blocked sensors may affect system accuracy. Do not clean the sensors with sharp objects.*

Note: *If your vehicle sustains damage leaving the sensors misaligned, this will cause inaccurate measurements or false alerts.*

The system warns you of objects that are within the detection zone of the bumper areas.

When the parking aid system sounds a tone, the audio system may reduce the set volume. When the warning ends, the audio system will return to the previously set volume.

The front parking aid sensors automatically turn on when you shift into reverse (R) or you press the parking aid button.

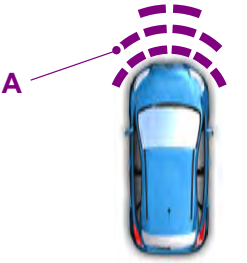

E184301

A Coverage area of up to 31 in (80 cm) from the center of the bumper and up to 14 in (35 cm) to the side of the bumper.

As your vehicle moves closer an obstacle, the rate of the audible warning increases. When the obstacle is less than 12 in (30 cm) away, the audible warning sounds continuously. If a stationary or receding object is detected 12 in (30 cm) or more from the side of your vehicle, the audible warning sounds for only three seconds. Once the system detects an object approaching, the audible warning sounds again.

2017 Fiesta (CCT) Canada/United States of America, HE8J 19A321 AB enUSA, Edition date: 201607, Second Printing

The system detects objects when you shift into reverse (R) or you press the parking aid button and:

- Your vehicle is moving toward a stationary object at a speed of 3 mph (5 km/h) or less.
- Your vehicle is moving at a speed of 3 mph (5 km/h) or less, and an object is approaching your vehicle at a speed of 3 mph (5 km/h) or less.

If a fault is present in the system, a warning message appears in the information display and does not allow you to switch the system on.

Sensing System Audible Warnings

Audible warnings sound when large objects are within the sensor coverage areas of either bumper in the following manner:

- You will hear a high-pitched tone from the front audio system speakers when large objects are within the sensor coverage area of the front bumper.
- You will hear a lower-pitched tone from the rear audio system speakers when large objects are within the sensor coverage area of the rear bumper.
- The parking aid system prioritises audible warnings based on large objects that are the closest to your vehicle's front or rear bumper. For example, if an object is 24 in (60 cm) from the front bumper and at the same time, an object is only 16 in (40 cm) from the rear bumper, you will hear the lower-pitched tone from the rear audio system speakers.
- You will hear an alternating audible warning from the front and rear audio system speakers if large objects are less than 12 in (30 cm) from the front and rear bumpers.
- If the object is more than 12 in (30 cm) from the side of the bumper area, the audible warning sounds for three seconds. If the object is less than 12 in (30 cm) from the side of the bumper area the audible warning sounds continuously.

Switching the Parking Aid System Off

Press the button to switch the system off. The system remains off until you switch the ignition off.

REAR VIEW CAMERA

WARNINGS

Do not place objects in front of the camera.

The rear view camera system is a reverse aid supplement device that still requires the driver to use it in conjunction with the interior and exterior mirrors for maximum coverage.

Objects that are close to either corner of the bumper or under the bumper, might not be seen on the screen due to the limited coverage of the camera system.

Reverse your vehicle slowly as higher speeds might limit your reaction time to stop your vehicle.

Use caution when the liftgate is ajar. If the liftgate is ajar, the camera will be out of position and the video image may be incorrect. All guidelines disappear when the liftgate is ajar. Some vehicles may not come equipped with guidelines.

2017 Fiesta (CCT) Canada/United States of America, HE8J 19A321 AB enUSA, Edition date: 201607, Second Printing

WARNINGS

Do not switch the camera features on or off when your vehicle is moving.

The operation of the camera may vary depending on the ambient temperature, vehicle and road conditions.

To help avoid personal injury always use caution when in reverse (R) and when using the rear view camera.

The rear view camera provides an image of the area behind your vehicle. During operation, lines appear in the display that represents the path of your vehicle and proximity to objects behind it.

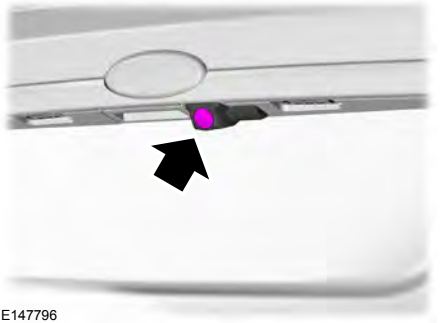

E147796

The camera is on the liftgate or illumination bar.

Switching the Rear View Camera On

WARNING

The camera may not detect objects that are very close to your vehicle.

Switch the ignition on and shift into reverse (R).

The image will display on the screen.

The system may not correctly operate in any of the following conditions:

- Dark areas.
- Intense light areas.
- If there is a sudden change to the ambient temperature.
- If the camera is wet.
- If the camera is dirty.
- If the camera is obstructed.

Using the Rear View Camera

WARNINGS

If the vehicle battery is disconnected, the guidelines are not fully functional directly after the battery is reconnected. The guidelines become fully functional after you drive your vehicle as straight as possible for five minutes at a minimum speed of 31 mph (50 km/h).

Objects above the camera may not be visible. Check the area behind your vehicle when necessary.

Note: *When reversing with a trailer the camera shows the direction of your vehicle and not the direction of the trailer.*

Note: *If the camera image is not clear, clean the camera lens with a soft cloth.*

Note: *If the image turns on when the transmission is not in reverse (R), the system requires service.*

Vehicles with Parking Aid

The display shows colored distance bars. This indicates the approximate distance from the rear bumper to an object.

2017 Fiesta (CCT) Canada/United States of America, HE8J 19A321 AB enUSA, Edition date: 201607, Second Printing

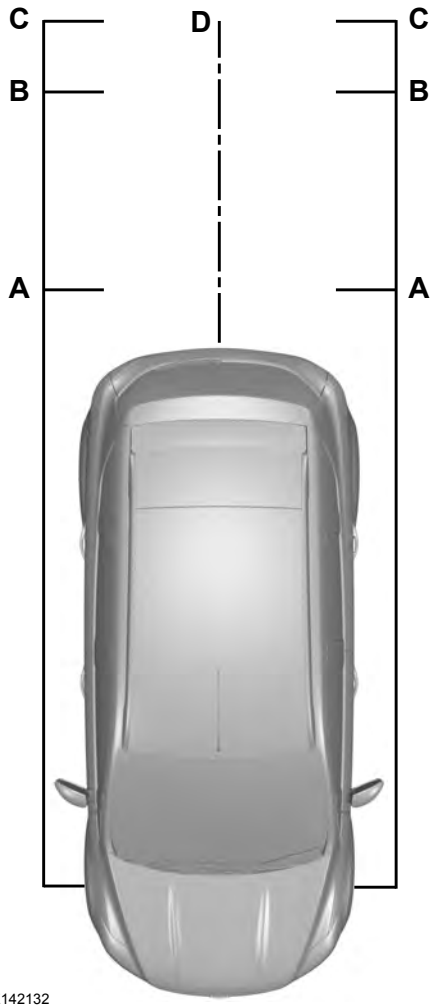

A Red - Zone.

B Yellow - Zone.

C Green - Zone.

D Black - center line of the projected vehicle path.

Distance markers are only a guide and are calculated for unloaded vehicles on an even road surface.

Switching the Rear View Camera Off

Shift from reverse (R).

2017 Fiesta (CCT) Canada/United States of America, HE8J 19A321 AB enUSA, Edition date: 201607, Second Printing

PRINCIPLE OF OPERATION

Cruise control lets you maintain a set speed without keeping your foot on the accelerator pedal. You can use cruise control when your vehicle speed is greater than 20 mph (30 km/h).

USING CRUISE CONTROL

WARNINGS

Do not use cruise control on winding roads, in heavy traffic or when the road surface is slippery. This could result in loss of vehicle control, serious injury or death.

When you are going downhill, your speed may increase above the set speed. The system will not apply the brakes. Change down a gear to assist the system in maintaining the set speed. Failure to do so could result in loss of vehicle control, serious injury or death.

E102679

The cruise controls are on the steering wheel.

Note: *Cruise control will disengage if your vehicle speed decreases more than 10 mph (16 km/h) below your set speed while driving uphill.*

Switching Cruise Control On

Press and release ***ON***.

Setting the Cruise Speed

1. Drive to desired speed.
2. Press and release ***SET+***.
3. Take your foot off the accelerator pedal.

The indicator displays in the instrument cluster.

Changing the Set Speed

- Press and release **SET+** or **SET-**. When you select km/h as the display measurement in the Information display the set speed changes in approximately 1 km/h increments. When you select mph as the display measurement in the information display the set speed changes in approximately 1 mph increments.
- Press the accelerator or brake pedal until you reach the desired speed. Press and release **SET+**.
- Press and hold **SET+** or **SET-**. Release the control when you reach the desired speed.

Canceling the Set Speed

Press and release **CAN**, or tap the brake pedal. The indicator no longer displays in the instrument cluster. The set speed will not be erased.

Note: *For vehicles with manual transmission, depressing the clutch pedal will also cancel the set speed.*

Resuming the Set Speed

Press and release **RES**. The indicator displays in the instrument cluster.

2017 Fiesta (CCT) Canada/United States of America, HE8J 19A321 AB enUSA, Edition date: 201607, Second Printing

Switching Cruise Control Off

Press and release ***OFF*** when the system is in stand by mode or switch the ignition off.

Note: *You erase the set speed when you switch the system off.*

2017 Fiesta (CCT) Canada/United States of America, HE8J 19A321 AB enUSA, Edition date: 201607, Second Printing

ECO MODE (If Equipped)

This system assists you in driving more efficiently by constantly monitoring characteristics of gear changing, anticipation of traffic conditions and speeds while driving.

The value of these characteristics is represented by petals shown in the display, with five petals being the most efficient. The more efficiently you drive, the better the rating, and the better your vehicle's overall fuel economy.

Note: *These efficiency values do not result in a defined fuel consumption figure. It might vary as it is not only related to these driving habits, but also influenced by many other factors such as short trips and cold starts.*

Note: *Frequent short trips, where the engine does not fully warm up, will also increase fuel consumption*

The system is accessed using the information display control. See **General Information** (page 86).

Type 1

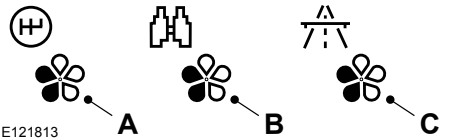

A	Gear shifting
B	Anticipation
C	Efficient speed

Gear shifting

Use the highest drivable gear appropriate for the road conditions to improve fuel consumption.

Anticipation

Adjust your vehicle speed and the distance to other vehicles to avoid the need for heavy braking or acceleration to improve fuel economy.

Efficient speed

Reduce your cruising speed on open roads to improve economy. Higher speeds use more fuel.

Resetting Eco Mode

Reset the average fuel consumption by using the information display control.

Note: *New values may take a short time to calculate*

STEERING

Electric Power Steering

WARNINGS

The electric power steering system has diagnostic checks that continuously monitor the system. If a fault is detected, a message displays in the information display. Stop your vehicle as soon as it is safe to do so. Switch the ignition off. After at least 10 seconds, switch the ignition on and watch the information display for a steering system warning message. If a steering system warning message returns, have the system checked by an authorized dealer.

If the system detects an error, you may not feel a difference in the steering, however a serious condition may exist. Obtain immediate service from an authorized dealer, failure to do so may result in loss of steering control.

Your vehicle has an electric power steering system. There is no fluid reservoir. No maintenance is required.

2017 Fiesta (CCT) Canada/United States of America, HE8J 19A321 AB enUSA, Edition date: 201607, Second Printing

If your vehicle loses electrical power while you are driving, electric power steering assistance is lost. The steering system still operates and you can steer your vehicle manually. Manually steering your vehicle requires more effort.

Extreme continuous steering may increase the effort required for you to steer your vehicle. This increased effort prevents overheating and permanent damage to the steering system. You do not lose the ability to steer your vehicle manually. Typical steering and driving maneuvers allow the system to cool and return to normal operation.

Steering Tips

If the steering wanders or pulls, check for:

- Correct tire pressures.
- Uneven tire wear.
- Loose or worn suspension components.
- Loose or worn steering components.
- Improper vehicle alignment.

Note: *A high crown in the road or high crosswinds may also make the steering seem to wander or pull.*

Adaptive Learning

The electronic power steering system adaptive learning helps correct road irregularities and improves overall handling and steering feel. It communicates with the brake system to help operate advanced stability control and accident avoidance systems. Additionally, whenever the battery is disconnected or a new battery installed, you must drive your vehicle a short distance before the system relearns the strategy and reactivates all systems.

2017 Fiesta (CCT) Canada/United States of America, HE8J 19A321 AB enUSA, Edition date: 201607, Second Printing

REAR UNDER FLOOR STORAGE (If Equipped)

Adjustable Load Floor

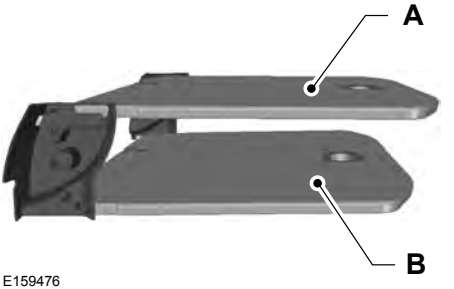

E159476

A Upper position

B Lower position

The load floor can be placed in either position on shelves located at the rear of the luggage compartment trim.

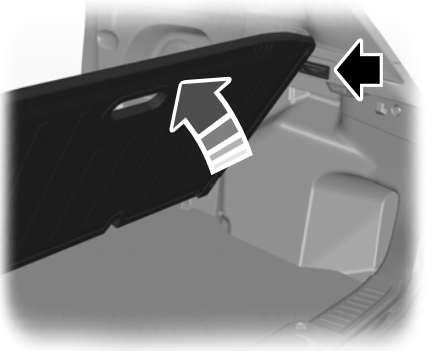

E157606

You can hold the load floor open. Use the stoppers located at the side of the luggage compartment to hold the floor up.

CARGO NETS (If Equipped)

Installing and Removing the Cargo Net

Installing the Cargo Net

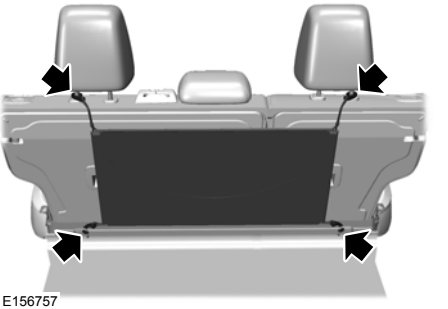

E156757

1. Raise the rear outer head restraints. See **Head Restraints** (page 103).
2. Attach the top securing clips to the head restraint outer posts.
3. Attach the bottom securing clips to the anchor points.

Removing the Cargo Net

1. Raise the rear outer head restraints. See **Head Restraints** (page 103).
2. Detach the top and bottom securing clips.

LUGGAGE COVERS (If Equipped)

WARNING

Do not place objects on the luggage cover.

2017 Fiesta (CCT) Canada/United States of America, HE8J 19A321 AB enUSA, Edition date: 201607, Second Printing

Removing the Cover

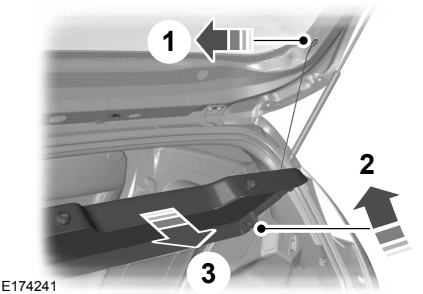

E174241

LOAD LIMIT

Vehicle Loading - with and without a Trailer

This section guides you in the proper loading of your vehicle, trailer, or both. Keep your loaded vehicle weight within its design rating capability, with or without a trailer. Properly loading your vehicle provides maximum return of vehicle design performance. Before you load your vehicle, become familiar with the following terms for determining your vehicle's weight rating, with or without a trailer, from the vehicle's Tire and Loading Information label or Safety Compliance Certification label.

Tire and Loading Label Information Example:

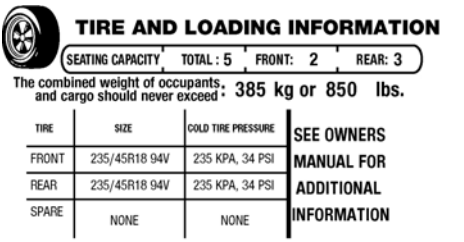

TIRE AND LOADING INFORMATION

SEATING CAPACITY | TOTAL : 5 | FRONT: 2 | REAR: 3

The combined weight of occupants and cargo should never exceed: 385 kg or 850 lbs.

TIRE	SIZE	COLD TIRE PRESSURE
FRONT	235/45R18 94V	235 KPA, 34 PSI
REAR	235/45R18 94V	235 KPA, 34 PSI
SPARE	NONE	NONE

SEE OWNERS MANUAL FOR ADDITIONAL INFORMATION

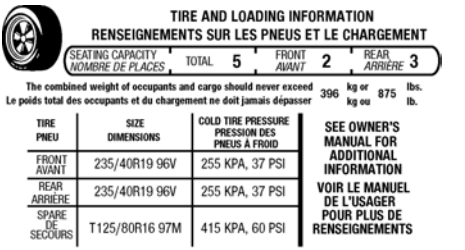

TIRE AND LOADING INFORMATION
RENSEIGNEMENTS SUR LES PNEUS ET LE CHARGEMENT

SEATING CAPACITY / *NOMBRE DE PLACES* | TOTAL 5 | FRONT / *AVANT* 2 | REAR / *ARRIÈRE* 3

The combined weight of occupants and cargo should never exceed 396 kg or lbs.
Le poids total des occupants et du chargement ne doit jamais dépasser 875 kg ou lb.

TIRE / PNEU	SIZE / DIMENSIONS	COLD TIRE PRESSURE / PRESSION DES PNEUS À FROID
FRONT / AVANT	235/40R19 96V	255 KPA, 37 PSI
REAR / ARRIÈRE	235/40R19 96V	255 KPA, 37 PSI
SPARE / DE SECOURS	T125/80R16 97M	415 KPA, 60 PSI

SEE OWNER'S MANUAL FOR ADDITIONAL INFORMATION
VOIR LE MANUEL DE L'USAGER POUR PLUS DE RENSEIGNEMENTS

E198719

2017 Fiesta (CCT) Canada/United States of America, HE8J 19A321 AB enUSA, Edition date: 201607, Second Printing

Payload

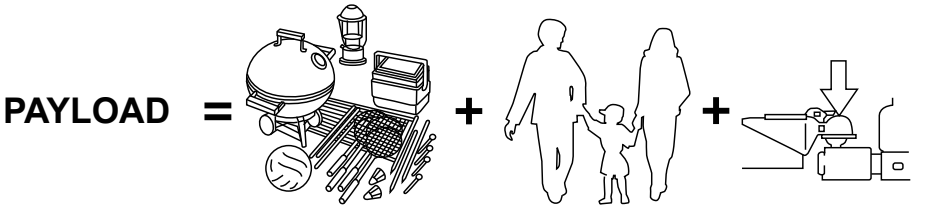

E143816

Payload is the combined weight of cargo and passengers that your vehicle is carrying. The maximum payload for your vehicle appears on the Tire and Loading label. The label is either on the B-pillar or the edge of the driver door. Vehicles exported outside the US and Canada may not have a tire and loading label. Look for “The combined weight of occupants and cargo should never exceed XXX kg OR XXX lb” for maximum payload. The payload listed on the Tire and Loading Information label is the maximum payload for your vehicle as built by the assembly plant. If you install any additional equipment on your vehicle, you must determine the new payload. Subtract the weight of the equipment from the payload listed on the Tire and Loading label. When towing, trailer tongue weight or king pin weight is also part of payload.

WARNING

The appropriate loading capacity of your vehicle can be limited either by volume capacity (how much space is available) or by payload capacity (how much weight the vehicle should carry). Once you have reached the maximum payload of your vehicle, do not add more cargo, even if there is space available. Overloading or improperly loading your vehicle can contribute to loss of vehicle control and vehicle rollover.

GAWR (Gross Axle Weight Rating)

GAWR is the maximum allowable weight that a single axle (front or rear) can carry. These numbers are on the Safety Compliance Certification label. The label is located on the door hinge pillar, door-latch post, or the door edge that meets the door-latch post, next to the driver seating position.

2017 Fiesta (CCT) Canada/United States of America, HE8J 19A321 AB enUSA, Edition date: 201607, Second Printing

The total load on each axle must never exceed its Gross Axle Weight Rating.

GVWR (Gross Vehicle Weight Rating)

GVWR is the maximum allowable weight of the fully loaded vehicle. This includes all options, equipment, passengers and cargo. It appears on the Safety Compliance Certification label. The label is located on the door hinge pillar, door-latch post, or the door edge that meets the door-latch post, next to the driver seating position.

The gross vehicle weight must never exceed the Gross Vehicle Weight Rating.

Safety Compliance Certification Label Example:

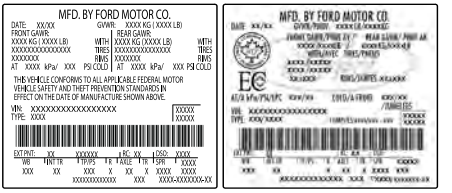

E198828

WARNING

Exceeding the Safety Compliance Certification label vehicle weight limits can adversely affect the performance and handling of your vehicle, cause vehicle damage and can result in the loss of control of your vehicle, serious personal injury or death.

Maximum Loaded Trailer Weight

Maximum loaded trailer weight is the highest possible weight of a fully loaded trailer the vehicle can tow. Consult an authorized dealer (or the RV and Trailer Towing Guide available at an authorized dealer) for more detailed information.

GCWR (Gross Combined Weight Rating)

GCWR is the maximum allowable weight of the vehicle and the loaded trailer, including all cargo and passengers, that the vehicle can handle without risking damage. (Important: The towing vehicle's braking system is rated for operation at Gross Vehicle Weight Rating, not at Gross Combined Weight Rating.) Separate functional brakes should

be used for safe control of towed vehicles and for trailers where the Gross Combined Weight of the towing vehicle plus the trailer exceed the Gross Vehicle Weight Rating of the towing vehicle.

The gross combined weight must never exceed the Gross Combined Weight Rating.

Note: *For trailer towing information refer to the RV and Trailer Towing Guide available at an authorized dealer.*

WARNINGS

Do not exceed the GVWR or the GAWR specified on the certification label.

Do not use replacement tires with lower load carrying capacities than the original tires because they may lower your vehicle's GVWR and GAWR limitations. Replacement tires with a higher limit than the original tires do not increase the GVWR and GAWR limitations.

Exceeding any vehicle weight rating can adversely affect the performance and handling of your vehicle, cause vehicle damage and can result in the loss of control of your vehicle, serious personal injury or death.

Steps for determining the correct load limit:

1. Locate the statement "The combined weight of occupants and cargo should never exceed XXX kg or XXX lb." on your vehicle’s placard.
2. Determine the combined weight of the driver and passengers that will be riding in your vehicle.
3. Subtract the combined weight of the driver and passengers from XXX kg or XXX lb.
4. The resulting figure equals the available amount of cargo and luggage load capacity. For example, if the “XXX” amount equals 1,400 lb. and there will be five 150 lb. passengers in your vehicle, the amount of available cargo and luggage load capacity is 650 lb. (1400-750 (5 x 150) = 650 lb.)
5. Determine the combined weight of luggage and cargo being loaded on the vehicle. That weight may not safely exceed the available cargo and luggage load capacity calculated in Step 4.
6. If your vehicle will be towing a trailer, load from your trailer will be transferred to your vehicle. Consult this manual to determine how this reduces the available cargo and luggage load capacity of your vehicle.

2017 Fiesta (CCT) Canada/United States of America, HE8J 19A321 AB enUSA, Edition date: 201607, Second Printing

Helpful examples for calculating the available amount of cargo and luggage load capacity

Suppose your vehicle has a 1400-pound (635-kilogram) cargo and luggage capacity. You decide to go golfing. Is there enough load capacity to carry you, four of your friends and all the golf bags? You and four friends average 220 pounds (99 kilograms) each and the golf bags weigh approximately 30 pounds (13.5 kilograms) each. The calculation would be: 1400 - (5 x 220) - (5 x 30) = 1400 - 1100 - 150 = 150 pounds. Yes, you have enough load capacity in your vehicle to transport four friends and your golf bags. In metric units, the calculation would be: 635 kilograms - (5 x 99 kilograms) - (5 x 13.5 kilograms) = 635 - 495 - 67.5 = 72.5 kilograms.

Suppose your vehicle has a 1400-pound (635-kilogram) cargo and luggage capacity. You and one of your friends decide to pick up cement from the local home improvement store to finish that patio you have been planning for the past two years. Measuring the inside of the vehicle with the rear seat folded down, you have room for twelve 100-pound (45-kilogram) bags of cement. Do you have enough load capacity to transport the cement to your home? If you and your friend each weigh 220 pounds (99 kilograms), the calculation would be: 1400 - (2 x 220) - (12 x 100) = 1400 - 440 - 1200 = - 240 pounds. No, you do not have enough cargo capacity to carry that much weight. In metric units, the calculation would be: 635 kilograms - (2 x 99 kilograms) - (12 x 45 kilograms) = 635 - 198 - 540 = -103 kilograms. You will need to reduce the load weight by at least 240 pounds (104 kilograms). If you remove three 100-pound (45-kilogram) cement bags, then the load calculation would be:1400 - (2 x 220) - (9 x 100) = 1400 - 440 - 900 = 60 pounds. Now you have the load capacity to transport the cement and your friend home. In metric units, the calculation would be: 635 kilograms - (2 x 99 kilograms) - (9 x 45 kilograms) = 635 - 198 - 405 = 32 kilograms.

The above calculations also assume that the loads are positioned in your vehicle in a manner that does not overload the front or the rear gross axle weight rating specified for your vehicle on the Safety Compliance Certification label.

2017 Fiesta (CCT) Canada/United States of America, HE8J 19A321 AB enUSA, Edition date: 201607, Second Printing

Special Loading Instructions for Owners of Pick-up Trucks and Utility-type Vehicles

WARNING

When loading the roof racks, we recommend you evenly distribute the load, as well as maintain a low center of gravity. Loaded vehicles, with higher centers of gravity, may handle differently than unloaded vehicles. Take extra precautions, such as slower speeds and increased stopping distance, when driving a heavily loaded vehicle.

2017 Fiesta (CCT) Canada/United States of America, HE8J 19A321 AB enUSA, Edition date: 201607, Second Printing

TOWING A TRAILER

WARNING

Your vehicle is not approved for trailer towing.

TRANSPORTING THE VEHICLE

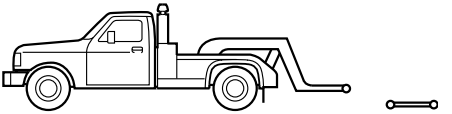

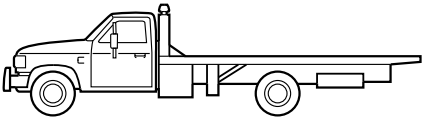

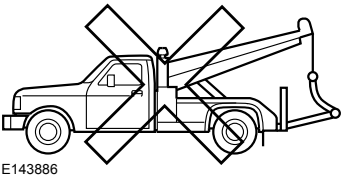

E143886

If you need to have your vehicle towed, contact a professional towing service or, if you are a member of a roadside assistance program, your roadside assistance service provider.

It is recommended that your vehicle be towed with a wheel lift and dollies or flatbed equipment. Do not tow with a slingbelt. Ford Motor Company has not approved a slingbelt towing procedure. If the vehicle is towed incorrectly, or by any other means, vehicle damage may occur.

Ford Motor Company produces a towing manual for all authorized tow truck operators. Have your tow truck operator refer to this manual for proper hook-up and towing procedures for your vehicle.

You can tow your vehicle from the front with wheel lift equipment to raise the front wheels off the ground. We recommend that you place the rear wheels on a dolly to prevent damage to the rear of your vehicle.

You can tow your vehicle from the rear with wheel lift equipment.

Note: *You must place the front wheels on a dolly to prevent damage to the transmission.*

TOWING THE VEHICLE ON FOUR WHEELS

Emergency Towing

WARNING

If your vehicle has a steering wheel lock make sure the ignition is in the accessory or on position when being towed.

If your vehicle is disabled without access to wheel dollies, a car-hauling trailer, or a flatbed transport vehicle it can be flat-towed with all wheels on the ground.

2017 Fiesta (CCT) Canada/United States of America, HE8J 19A321 AB enUSA, Edition date: 201607, Second Printing

You may do this under the following conditions:

- Your vehicle is facing forward so that it is towed in a forward direction.
- The transmission gear shift lever is placed in position **N**. If the transmission gear shift lever cannot be moved to position **N**, it may need to be overridden. See **Transmission** (page 126).
- Maximum speed is 35 mph (56 km/h).
- Maximum distance is 50 miles (80 kilometers).

Recreational Towing

Note: *Put your climate control system in recirculated air mode to prevent exhaust fumes from entering the vehicle.*

Follow these guidelines if you have a need for recreational (RV) towing. An example of recreational towing would be towing your vehicle behind a motorhome. These guidelines are designed to ensure that your transmission is not damaged.

Vehicles with a Manual Transmission

Your vehicle can be towed with all four wheels on the ground or with the front wheels off the ground by using a tow dolly. If you are using a tow dolly follow the instructions specified by the equipment provider. If you tow your vehicle with all wheels on the ground, follow these instructions:

1. Tow only with your vehicle in the forward direction. Release the parking brake.
2. Place the transmission in neutral.

Note: *Do not exceed 70 mph (113 km/h) when towing your vehicle.*

Vehicles with an Automatic Transmission - with Ignition Switch

Note: *There must be battery power to properly move the transmission's internal components to neutral in step 3. Also, moving the gearshift to the neutral position without first turning the ignition to the on **II** position limits the towing capability to 35 mph (56 km/h) and 50 miles (80 kilometers).*

1. Release the parking brake.
2. Switch the ignition to the on (**II**) position.
3. Press the brake pedal, then move the gearshift to the neutral position.
4. Wait for a message indicating that the transmission is ready in the information and entertainment display, then switch the ignition off and release the brake pedal.
5. Disconnect the negative (black) cable from the battery. The anti-theft system is disabled until the battery cable is reconnected. See **Changing the 12V Battery** (page 193).

Note: *The maximum towing speed is 70 mph (113 km/h).*

Note: *There is no limit on towing distance.*

After towing, start the engine within 15 minutes of reconnecting the battery cable. See **Changing the 12V Battery** (page 193).

Vehicles with an Automatic Transmission - with Keyless Starting

Note: *There must be battery power to properly move the transmission's internal components to neutral in step 3. Also, moving the gearshift to the neutral position without first turning the ignition to the on **II** position limits the towing capability to 35 mph (56 km/h) and 50 miles (80 kilometers).*

1. Release the parking brake.

2017 Fiesta (CCT) Canada/United States of America, HE8J 19A321 AB enUSA, Edition date: 201607, Second Printing

2. Switch the ignition on by pressing the keyless start button, but do not apply the brake pedal.
3. Press the brake pedal, then move the gearshift to the neutral position. Release the brake pedal.
4. Wait for a message indicating that the transmission is ready in the information and entertainment display, then switch the ignition off by pressing the keyless start button.
5. Disconnect the negative (black) cable from the battery. The door key is needed to lock and unlock doors when the battery cable is disconnected. Also, the anti-theft system is disabled until the battery cable is reconnected. See **Changing the 12V Battery** (page 193).

Note: *The maximum towing speed is 70 mph (113 km/h).*

Note: *There is no limit on towing distance.*

After towing, start the engine within 15 minutes of reconnecting the battery cable. See **Changing the 12V Battery** (page 193).

2017 Fiesta (CCT) Canada/United States of America, HE8J 19A321 AB enUSA, Edition date: 201607, Second Printing

BREAKING-IN

You need to break in new tires for approximately 300 mi (480 km). During this time, your vehicle may exhibit some unusual driving characteristics.

Avoid driving too fast during the first 1,000 mi (1,600 km). Vary your speed frequently and change up through the gears early. Do not labor the engine.

Do not tow during the first 1,000 mi (1,600 km).

ECONOMICAL DRIVING

Fuel economy is affected by several things such as how you drive, the conditions you drive under and how you maintain your vehicle.

There are some things to keep in mind that may improve your fuel economy:

- Accelerate and slow down in a smooth, moderate fashion.
- Drive at steady speeds.
- Anticipate stops; slowing down may eliminate the need to stop.
- Combine errands and minimize stop-and-go driving (When running errands, go to the furthest destination first and then work your way back home).
- Close the windows for high-speed driving.
- Drive at reasonable speeds.
- Keep the tires properly inflated and use only the recommended size.
- Use the recommended engine oil.
- Perform all regularly scheduled maintenance.

There are also some things you may want to avoid doing because they reduce your fuel economy:

- Avoid sudden or hard accelerations.
- Avoid revving the engine before turning off the car.
- Avoid long idle periods.
- Do not warm up your vehicle on cold mornings.
- Reduce the use of air conditioning and heat.
- Avoid using speed control in hilly terrain.
- Do not rest your foot on the brake pedal while driving.
- Avoid carrying unnecessary weight.
- Avoid adding particular accessories to your vehicle (e.g. bug deflectors, rollbars/light bars, running boards, ski racks).
- Avoid driving with the wheels out of alignment.

DRIVING THROUGH WATER

WARNING

Do not drive through flowing or deep water as you may lose control of your vehicle.

Note: *Driving through standing water can cause vehicle damage.*

Note: *Engine damage can occur if water enters the air filter.*

Before driving through standing water, check the depth. Never drive through water that is higher than the bottom of the front rocker area of your vehicle.

2017 Fiesta (CCT) Canada/United States of America, HE8J 19A321 AB enUSA, Edition date: 201607, Second Printing

E176360

When driving through standing water, drive very slowly and do not stop your vehicle. Your brake performance and traction may be limited. After driving through water and as soon as it is safe to do so:

- Lightly press the brake pedal to dry the brakes and to check that they work.
- Check that the horn works.
- Check that the exterior lights work.
- Turn the steering wheel to check that the steering power assist works.

FLOOR MATS

WARNINGS

Use a floor mat designed to fit the footwell of your vehicle that does not obstruct the pedal area. Failure to follow this instruction could result in the loss of control of your vehicle, personal injury or death.

Pedals that cannot move freely can cause loss of vehicle control and increase the risk of serious personal injury.

WARNINGS

Secure the floor mat to both retention devices so that it cannot slip out of position and interfere with the pedals. Failure to follow this instruction could result in the loss of control of your vehicle, personal injury or death.

Do not place additional floor mats or any other covering on top of the original floor mats. This could result in the floor mat interfering with the operation of the pedals. Failure to follow this instruction could result in the loss of control of your vehicle, personal injury or death.

Always make sure that objects cannot fall into the driver foot well while your vehicle is moving. Objects that are loose can become trapped under the pedals causing a loss of vehicle control.

E142666

To install the floor mats, position the floor mat eyelet over the retention post and press down to lock in position.

To remove the floor mat, reverse the installation procedure.

Note: *Regularly check the floor mats to make sure they are secure.*

2017 Fiesta (CCT) Canada/United States of America, HE8J 19A321 AB enUSA, Edition date: 201607, Second Printing

ROADSIDE ASSISTANCE

Vehicles Sold in the United States: Getting Roadside Assistance

To fully assist you should you have a vehicle concern, Ford Motor Company offers a complimentary roadside assistance program. This program is separate from the New Vehicle Limited Warranty.

The service is available:

- 24 hours a day, seven days a week.
- For the coverage period listed on the Roadside Assistance Card included in your Owner's Manual portfolio.

Roadside Assistance covers:

- A flat tire change with a good spare (except vehicles supplied with a tire inflation kit).
- Battery jump start.
- Lock-out assistance (key replacement cost is the customer's responsibility).
- Fuel delivery — independent service contractors, if not prohibited by state, local or municipal law, shall deliver up to 2 gal (8 L) of gasoline or 5 gal (20 L) of diesel fuel to a disabled vehicle. Roadside Assistance limits fuel delivery service to two no-charge occurrences within a 12-month period.
- Winch out — available within 100 ft (30 m) of a paved or county maintained road, no recoveries.
- Towing — independent service contractors, if not prohibited by state, local or municipal law, shall tow Ford eligible vehicles to an authorized dealer within 35 mi (56 km) of the disablement location or to the nearest authorized dealer. If a member requests a tow to an authorized dealer that is more than 35 mi (56 km) from the disablement location, the member shall be responsible for any mileage costs in excess of 35 mi (56 km).
- Roadside Assistance includes up to $200 for a towed trailer if the disabled eligible vehicle requires service at the nearest authorized dealer. If the towing vehicle is operational but the trailer is not, then the trailer does not qualify for any roadside services.

Vehicles Sold in the United States: Using Roadside Assistance

Complete the roadside assistance identification card and place it in your wallet for quick reference. This card is in the owner's information portfolio in the glove compartment.

United States vehicle customers who require Roadside Assistance, call 1-800-241-3673.

If you need to arrange roadside assistance for yourself, Ford Motor Company reimburses a reasonable amount for towing to the nearest dealership within 35 mi (56 km). To obtain reimbursement information, United States vehicle customers call 1-800-241-3673. Customers need to submit their original receipts.

2017 Fiesta (CCT) Canada/United States of America, HE8J 19A321 AB enUSA, Edition date: 201607, Second Printing

Vehicles Sold in Canada: Getting Roadside Assistance

To fully assist you should you have a vehicle concern, Ford Motor Company of Canada, Limited offers a complimentary roadside assistance program. This program is eligible within Canada or the continental United States.

This program is separate from the New Vehicle Limited Warranty, but the coverage is concurrent with the powertrain coverage period of your vehicle.

Canadian customers who require roadside assistance, call 1-800-665-2006.

Vehicles Sold in Canada: Using Roadside Assistance

Complete the roadside assistance identification card and place it in your wallet for quick reference.

In Canada, this card is found in the Warranty Guide in the glove compartment of your vehicle.

Vehicles Sold in Canada: Roadside Assistance Program Coverage

The service is available 24 hours a day, seven days a week.

Canadian roadside coverage and benefits may differ from the U.S. coverage.

If you require more information, please refer to the coverage section of your warranty guide, call us in Canada at 1-800-665-2006, or visit our website at www.ford.ca.

HAZARD FLASHERS

Note: *If used when the vehicle is not running, the battery will lose charge. There may be insufficient power to restart your vehicle.*

The hazard warning button is located on the instrument panel. Use it when your vehicle is creating a safety hazard for other motorists.

- Press the button to turn on the hazard warning function, and the front and rear direction indicators will flash.
- Press the button again to turn them off.

FUEL SHUTOFF

WARNING

Failure to inspect and, if necessary, repair fuel leaks after a collision may increase the risk of fire and serious injury. Ford Motor Company recommends that the fuel system be inspected by an authorized dealer after any collision.

In the event of a moderate to severe collision, this vehicle includes a fuel pump shutoff feature that stops the flow of fuel to the engine. Not every impact will cause a shutoff.

Should your vehicle shut off after a collision, you may restart your vehicle. For vehicles equipped with a key system:

1. Switch off the ignition.
2. Switch on the ignition.
3. Repeat Steps 1 and 2 to re-enable the fuel pump.

For vehicles equipped with a push button start system:

1. Press the **START/STOP** button to switch off the ignition.
2. Press the brake pedal and press the **START/STOP** button to switch on the ignition.

2017 Fiesta (CCT) Canada/United States of America, HE8J 19A321 AB enUSA, Edition date: 201607, Second Printing

3. Remove your foot from the brake pedal and press the **START/STOP** button to switch off the ignition.
4. You can either attempt to start the engine by pressing the brake pedal and the **START/STOP** button, or switch on the ignition only by pressing the **START/STOP** button without pressing the brake pedal. Both ways re-enable the fuel system.

Note: *When you try to restart your vehicle after a fuel shutoff, the vehicle makes sure that various systems are safe to restart. Once your vehicle determines that the systems are safe, then the vehicle will allow you to restart.*

Note: *In the event that your vehicle does not restart after your third attempt, contact an authorized dealer.*

JUMP STARTING THE VEHICLE

WARNINGS

Batteries normally produce explosive gases which can cause personal injury. Therefore, do not allow flames, sparks or lighted substances to come near the battery. When working near the battery, always shield your face and protect your eyes. Always provide correct ventilation.

Keep batteries out of reach of children. Batteries contain sulfuric acid. Avoid contact with skin, eyes or clothing. Shield your eyes when working near the battery to protect against possible splashing of acid solution. In case of acid contact with skin or eyes, flush immediately with water for a minimum of 15 minutes and get prompt medical attention. If acid is swallowed, call a physician immediately.

Use only adequately sized cables with insulated clamps.

Preparing Your Vehicle

Do not attempt to push-start your automatic transmission vehicle.

Note: *Attempting to push-start a vehicle with an automatic transmission may cause transmission damage.*

Note: *Use only a 12-volt supply to start your vehicle.*

Note: *Do not disconnect the battery of the disabled vehicle as this could damage the vehicle electrical system.*

Park the booster vehicle close to the hood of the disabled vehicle, making sure the two vehicles do not touch.

Connecting the Jumper Cables

WARNINGS

Do not attach the cables to fuel lines, engine rocker covers, the intake manifold or electrical components as grounding points. Stay clear of moving parts. To avoid reverse polarity connections, make sure that you correctly identify the positive (+) and negative (-) terminals on both the disabled and booster vehicles before connecting the cables.

Do not attach the end of the positive cable to the studs or L-shaped eyelet located above the positive (+) terminal of your vehicle's battery. High current may flow through and cause damage to the fuses.

Do not connect the end of the second cable to the negative (-) terminal of the battery to be jumped. A spark may cause an explosion of the gases that surround the battery.

Note: *In the illustration, the bottom vehicle represents the booster vehicle.*

2017 Fiesta (CCT) Canada/United States of America, HE8J 19A321 AB enUSA, Edition date: 201607, Second Printing

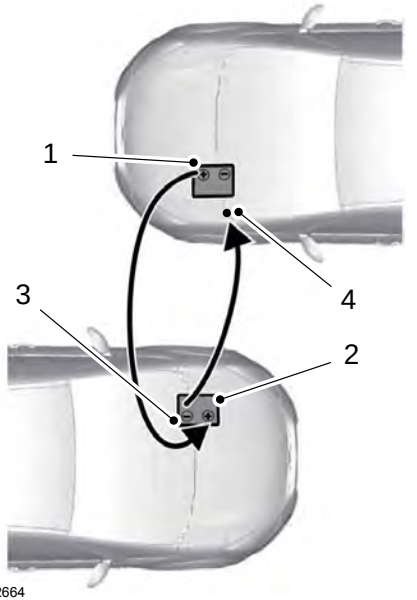

E142664

1. Connect the positive (+) jumper cable to the positive (+) terminal of the discharged battery.
2. Connect the other end of the positive (+) cable to the positive (+) terminal of the booster vehicle battery.
3. Connect the negative (-) cable to the negative (-) terminal of the booster vehicle battery.
4. Make the final connection of the negative (-) cable to an exposed metal part of the stalled vehicle's engine, away from the battery and the fuel injection system, or connect the negative (-) cable to a ground connection point if available.

Jump Starting

1. Start the engine of the booster vehicle and rev the engine moderately, or press the accelerator gently to keep your engine speed between 2000 and 3000 RPM, as shown in your tachometer.
2. Start the engine of the disabled vehicle.
3. Once the disabled vehicle has been started, run both vehicle engines for an additional three minutes before disconnecting the jumper cables.

Removing the Jumper Cables

Remove the jumper cables in the reverse order that they were connected.

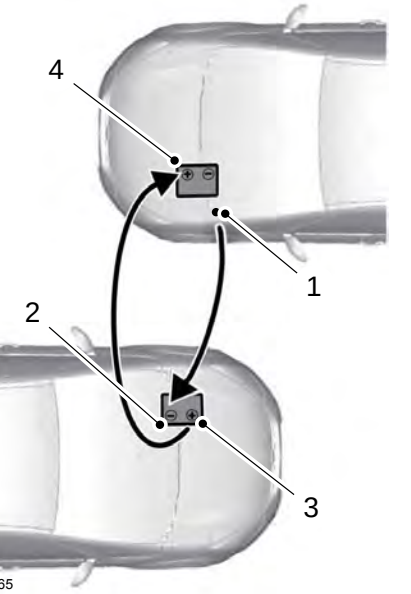

E142665

1. Remove the negative (-) jumper cable from the disabled vehicle.

2017 Fiesta (CCT) Canada/United States of America, HE8J 19A321 AB enUSA, Edition date: 201607, Second Printing

2. Remove the jumper cable on the negative (-) terminal of the booster vehicle battery.
3. Remove the jumper cable from the positive (+) terminal of the booster vehicle battery.
4. Remove the jumper cable from the positive (+) terminal of the disabled vehicle battery.
5. Allow the engine to idle for at least one minute.

2017 Fiesta (CCT) Canada/United States of America, HE8J 19A321 AB enUSA, Edition date: 201607, Second Printing

GETTING THE SERVICES YOU NEED

Warranty repairs to your vehicle must be performed by an authorized dealer. While any authorized dealer handling your vehicle line will provide warranty service, we recommend you return to your selling authorized dealer who wants to ensure your continued satisfaction.

Please note that certain warranty repairs require special training and equipment, so not all authorized dealers are authorized to perform all warranty repairs. This means that, depending on the warranty repair needed, you may have to take your vehicle to another authorized dealer.

A reasonable time must be allowed to perform a repair after taking your vehicle to the authorized dealer. Repairs will be made using Ford or Motorcraft® parts, or remanufactured or other parts that are authorized by Ford.

Away From Home

If you are away from home when your vehicle needs service, contact the Ford Customer Relationship Center or use the online resources listed below to find the nearest authorized dealer.

In the United States:

Mailing address

Ford Motor Company
Customer Relationship Center
P.O. Box 6248
Dearborn, MI 48126

Telephone

1-800-392-3673 (FORD)
(TDD for the hearing impaired:
1-800-232-5952)

Additional information and resources are available online:

Website
www.owner.ford.com

These are some of the items that can be found online:

- U.S. dealer locator by Dealer Name, City/State or Zip Code.
- Owner Manuals.
- Maintenance Schedules.
- Recalls.
- Ford Extended Service Plans.
- Ford Genuine Accessories.
- Service specials and promotions.

In Canada:

Mailing address

Customer Relationship Centre
Ford Motor Company of Canada, Limited
P.O. Box 2000
Oakville, Ontario L6K 0C8

Telephone

1-800-565-3673 (FORD)

Website
www.ford.ca

Twitter

@FordServiceCA (English Canada)
@FordServiceQC (Quebec)

Additional Assistance

If you have questions or concerns, or are unsatisfied with the service you are receiving, follow these steps:

1. Contact your Sales Representative or Service Advisor at your selling or servicing authorized dealer.

2017 Fiesta (CCT) Canada/United States of America, HE8J 19A321 AB enUSA, Edition date: 201607, Second Printing

2. If your inquiry or concern remains unresolved, contact the Sales Manager, Service Manager or Customer Relations Manager.
3. If you require assistance or clarification on Ford Motor Company policies, please contact the Ford Customer Relationship Center.

In order to help us serve you better, please have the following information available when contacting a Customer Relationship Center:

- Vehicle Identification Number.
- Your telephone number (home and business).
- The name of the authorized dealer and city where located.
- The vehicle's current odometer reading.

In some states within the United States, you must directly notify Ford in writing before pursuing remedies under your state's warranty laws, and Ford is also allowed a final repair attempt.

Additionally, in some states within the United States, a consumer has the option of submitting a warranty dispute to the BBB Auto Line before taking action under the Magnuson-Moss Warranty Act, or to the extent allowed by state law, before pursuing replacement or repurchase remedies provided by certain state laws. This dispute handling procedure is not required prior to enforcing state created rights or other rights which are independent of the Magnuson-Moss Warranty Act or state replacement or repurchase laws.

IN CALIFORNIA (U.S. ONLY)

California Civil Code Section 1793.2(d) requires that, if a manufacturer or its representative is unable to repair a motor vehicle to conform to the vehicle's applicable express warranty after a reasonable number of attempts, the manufacturer shall be required to either replace the vehicle with one substantially identical or repurchase the vehicle and reimburse the buyer in an amount equal to the actual price paid or payable by the consumer (less a reasonable allowance for consumer use). The consumer has the right to choose whether to receive a refund or replacement vehicle.

California Civil Code Section 1793.22(b) presumes that the manufacturer has had a reasonable number of attempts to conform the vehicle to its applicable express warranties if, within the first 18 months of ownership of a new vehicle or the first 18,000 mi (29,000 km), whichever occurs first:

1. Two or more repair attempts are made on the same non-conformity likely to cause death or serious bodily injury OR
2. Four or more repair attempts are made on the same nonconformity (a defect or condition that substantially impairs the use, value or safety of the vehicle) OR
3. The vehicle is out of service for repair of nonconformities for a total of more than 30 calendar days (not necessarily all at one time).

In the case of 1 or 2 above, the consumer must also notify the manufacturer of the need for the repair of the nonconformity at the following address:

Ford Motor Company
16800 Executive Plaza Drive
Mail Drop 3NE-B
Dearborn, MI 48126

2017 Fiesta (CCT) Canada/United States of America, HE8J 19A321 AB enUSA, Edition date: 201607, Second Printing

You are required to submit your warranty dispute to BBB AUTO LINE before asserting in court any rights or remedies conferred by California Civil Code Section 1793.22(b). You are also required to use BBB AUTO LINE before exercising rights or seeking remedies created by the Federal Magnuson-Moss Warranty Act, 15 U.S.C. sec. 2301 et seq. If you choose to seek redress by pursuing rights and remedies not created by California Civil Code Section 1793.22(b) or the Magnuson-Moss Warranty Act, resort to BBB AUTO LINE is not required by those statutes.

THE BETTER BUSINESS BUREAU (BBB) AUTO LINE PROGRAM (U.S. ONLY)

Your satisfaction is important to Ford Motor Company and to your dealer. If a warranty concern has not been resolved using the three-step procedure outlined earlier in this chapter in the Getting the Services you need section, you may be eligible to participate in the BBB AUTO LINE program.

The BBB AUTO LINE program consists of two parts – mediation and arbitration. During mediation, a representative of the BBB will contact both you and Ford Motor Company to explore options for settlement of the claim. If an agreement is not reached during mediation or you do not want to participate in mediation, and if your claim is eligible, you may participate in the arbitration process. An arbitration hearing will be scheduled so that you can present your case in an informal setting before an impartial person. The arbitrator will consider the testimony provided and make a decision after the hearing.

Disputes submitted to the BBB AUTO LINE program are usually decided within forty days after you file your claim with the BBB. You are not bound by the decision, and may reject the decision and proceed to court where all findings of the BBB Auto Line dispute, and decision, are admissible in the court action. Should you choose to accept the BBB AUTO LINE decision, Ford is then bound by the decision, and must comply with the decision within 30 days of receipt of your acceptance letter.

BBB AUTO LINE Application: Using the information provided below, please call or write to request a program application. You will be asked for your name and address, general information about your new vehicle, information about your warranty concerns, and any steps you have already taken to try to resolve them. A Customer Claim Form will be mailed that will need to be completed, signed and returned to the BBB along with proof of ownership. Upon receipt, the BBB will review the claim for eligibility under the Program Summary Guidelines.

You can get more information by calling BBB AUTO LINE at 1-800-955-5100, or writing to:

BBB AUTO LINE
3033 Wilson Boulevard, Suite 600
Arlington, Virginia 22201

BBB AUTO LINE applications can also be requested by calling the Ford Motor Company Customer Relationship Center at 1-800-392-3673.

Note: *Ford Motor Company reserves the right to change eligibility limitations, modify procedures, or to discontinue this process at any time without notice and without obligation.*

2017 Fiesta (CCT) Canada/United States of America, HE8J 19A321 AB enUSA, Edition date: 201607, Second Printing

UTILIZING THE MEDIATION/ARBITRATION PROGRAM (CANADA ONLY)

For vehicles delivered to authorized Canadian dealers. In those cases where you continue to feel that the efforts by Ford of Canada and the authorized dealer to resolve a factory-related vehicle service concern have been unsatisfactory, Ford of Canada participates in an impartial third party mediation/arbitration program administered by the Canadian Motor Vehicle Arbitration Plan (CAMVAP).

The CAMVAP program is a straight forward and relatively speedy alternative to resolve a disagreement when all other efforts to produce a settlement have failed. This procedure is without cost to you and is designed to eliminate the need for lengthy and expensive legal proceedings.

In the CAMVAP program, impartial third-party arbitrators conduct hearings at mutually convenient times and places in an informal environment. These impartial arbitrators review the positions of the parties, make decisions and, when appropriate, render awards to resolve disputes. CAMVAP decisions are fast, fair, and final as the arbitrator's award is binding on both you and Ford of Canada.

CAMVAP services are available in all Canadian territories and provinces. For more information, without charge or obligation, call your CAMVAP Provincial Administrator directly at 1-800-207-0685 or visit www.camvap.ca.

GETTING ASSISTANCE OUTSIDE THE U.S. AND CANADA

Before exporting your vehicle to a foreign country, contact the appropriate foreign embassy or consulate. These officials can inform you of local vehicle registration regulations and where to find unleaded fuel or petrol/gas engines or the proper sulfur fuel for diesel engines.

If you cannot find the proper fuel recommended for your vehicle, contact our Customer Relationship Center.

The use of improper fuels in your vehicle without proper conversion may damage the effectiveness of your emission control system and may cause engine knocking or serious engine damage. Ford Motor Company or Ford of Canada is not responsible for any damage caused by use of improper fuel. Using improper fuels may also result in difficulty importing your vehicle back into the United States.

If your vehicle must be serviced while you are traveling or living in Asia-Pacific Region, Sub-Saharan Africa, U.S. Virgin Islands and/or Puerto Rico , Central America, the Caribbean, and Israel and the Middle East, contact the nearest authorized dealer. If the authorized dealer cannot help you, contact the corresponding Ford Customer Assistance Center:

FORD MOTOR COMPANY

Customer Relationship Centers in:

2017 Fiesta (CCT) Canada/United States of America, HE8J 19A321 AB enUSA, Edition date: 201607, Second Printing

Customer Relationship Center	Phone	Fax	E-mail
Asia Pacific	N/A	N/A	apemcrc@ford.com
Caribbean and Central America	+1 313 594 4857	-	expcac@ford.com
Middle East	Ford 80004443673	971 4 3327 266	menacac@ford.com
	Lincoln 80004441067		
	UAE 80004441066		
	Saudi Arabia 8008443673		
	Mobily and Zain cell phone users in Saudi 800850078		
Puerto Rico and U.S. Virgin Islands	+1-800-841-3673	N/A	prcac@ford.com
Sub-Saharan Africa	+1-313-594-4857	N/A	ssacrc@ford.com
South Korea	+63-2-717-6410	N/A	infokr1@ford.com or infokr@lincoln.com

If you buy your vehicle in North America and then relocate to any of the above locations, register your vehicle identification number (VIN) and new address with Ford Global Trade Services by emailing, expcso@ford.com.

If you are in another foreign country, contact the nearest authorized dealer. In the event your inquiry is unresolved, communicate your concern with the dealership's Sales Manager, Service Manager or Customer Relations Manager. If you require additional assistance or clarification, please contact the respective Customer Relationship Center as previously listed.

Customers in the U.S. should call 1-800-392-3673.

ORDERING ADDITIONAL OWNER'S LITERATURE

To order the publications in this portfolio, contact Helm, Incorporated at:

HELM, INCORPORATED
47911 Halyard Drive
Plymouth, Michigan 48170
Attention: Customer Service

Or to order a free publication catalog, call toll free: 1-800-782-4356

Monday-Friday 8:00 a.m. - 6:00 p.m. EST

2017 Fiesta (CCT) Canada/United States of America, HE8J 19A321 AB enUSA, Edition date: 201607, Second Printing

Helm, Incorporated can also be reached by their website:

www.helminc.com

(Items in this catalog may be purchased by credit card, check or money order.)

Obtaining a French Owner's Manual

French Owner's Manual can be obtained from your authorized dealer or by contacting Helm, Incorporated using the contact information listed previously in this section.

REPORTING SAFETY DEFECTS (U.S. ONLY)

E142557

If you believe that your vehicle has a defect which could cause a crash or could cause injury or death, you should immediately inform the National Highway Traffic Safety Administration (NHTSA) in addition to notifying Ford Motor Company.

If NHTSA receives similar complaints, it may open an investigation, and if it finds that a safety defect exists in a group of vehicles, it may order a recall and remedy campaign. However, NHTSA cannot become involved in individual problems between you, your dealer, or Ford Motor Company.

To contact NHTSA, you may call the Vehicle Safety Hotline toll-free at 1-888-327-4236 (TTY: 1-800-424-9153); go to http://www.safercar.gov; or write to:

Administrator

1200 New Jersey Avenue, Southeast

Washington, D.C. 20590

You can also obtain other information about motor vehicle safety from http://www.safercar.gov.

REPORTING SAFETY DEFECTS (CANADA ONLY)

If you believe that your vehicle has a defect which could cause a crash or could cause injury or death, you should immediately inform Transport Canada and Ford of Canada.

2017 Fiesta (CCT) Canada/United States of America, HE8J 19A321 AB enUSA, Edition date: 201607, Second Printing

Transport Canada Contact Information	
Website	http://www.tc.gc.ca/eng/motorvehiclesafety/reporting-defects-motor-vehicles.html (English)
Website	http://www.tc.gc.ca/fra/securiteautomobile/signaler-defauts-vehicules-automobiles.html (French)
Phone	1–800–333–0510

Ford of Canada Contact Information	
Website	www.ford.ca
Phone	1–800–565-3673

2017 Fiesta (CCT) Canada/United States of America, HE8J 19A321 AB enUSA, Edition date: 201607, Second Printing

FUSE SPECIFICATION CHART

Engine Compartment Fuse Box

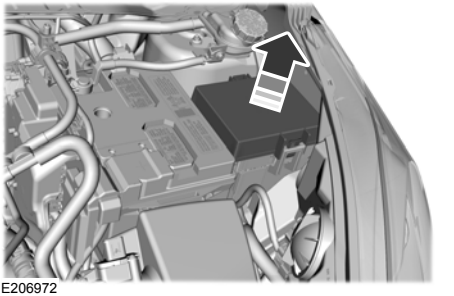

E206972

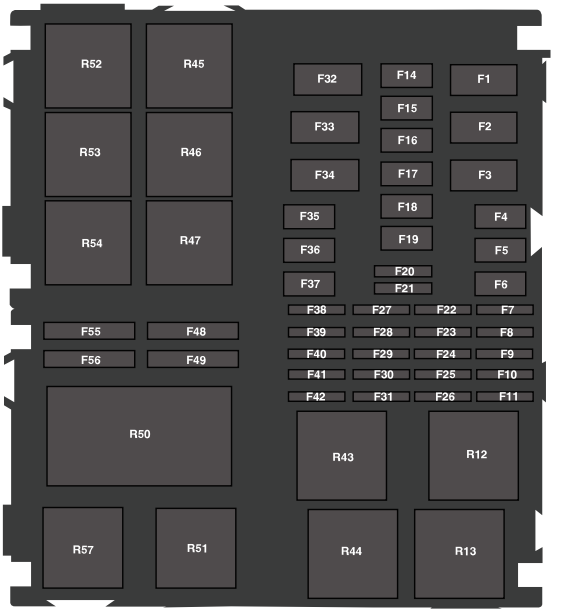

E206971

Fuse Number	Fuse Rating	Protected Component
F1	40A	Anti-lock brake system module.
	60A	Stability assist.

2017 Fiesta (CCT) Canada/United States of America, HE8J 19A321 AB enUSA, Edition date: 201607, Second Printing

Fuse Number	Fuse Rating	Protected Component
		Anti-lock brake system module.
F2	40A	Cooling fan relay.
	60A	High-speed cooling fan relay.[5]
F3	60A	Passenger compartment fuse box.
F4	20A	Body control module. Power door locks.
F5	-	Not used.
F6	40A	Blower motor relay. Blower motor.
F7	-	Not used.
F8	-	Not used.
F9	7.5A	Front fog lamp relay. Headlamp high beam relay.
F10	15A	Body control module. Right-hand exterior lamps.
F11	15A	Body control module. Left-hand exterior lamps.
F14	-	Not used.
F15	-	Not used.
F16	-	Not used.
F17	-	Not used.
F18	-	Not used.
F19	30A	Fuel injectors.
F20	-	Not used.
F21	7.5A	Mass air flow sensor.[2]
	10A	Fuel injectors.
F22	15A	Powertrain control module.
F23	15A	Camshaft position sensor. Heated oxygen sensor.

2017 Fiesta (CCT) Canada/United States of America, HE8J 19A321 AB enUSA, Edition date: 201607, Second Printing

Fuse Number	Fuse Rating	Protected Component
F24	15A	Ignition coil.[3]
	20A	Ignition coil.[2]
F25	10A	Variable camshaft timing. Evaporative emission canister purge valve. R57, R45 and R50 relay coil.
F26	7.5A	ECSS system.[4]
	15A	Active grille shutter.[1] Water pump.[1] Air conditioning control module.[1]
F27	-	Not used.
F28	-	Not used.
F29	-	Not used.
F30	-	Not used.
F31	-	Not used.
F32	60A	Passenger compartment fuse box.
F33	60A	Power windows.
F34	40A	Transmission control module.[6]
	60A	High speed cooling fan.[1]
F35	40A	Anti-lock brake system with electronic stability control.
F36	30A	Engine start inhibitor. Starter motor solenoid.
F37	30A	Heated rear window. Heated exterior mirrors.
F38	20A	Body control module. Battery saver.
F39	15A	Body control module. Direction indicators.
F40	-	Not used.

2017 Fiesta (CCT) Canada/United States of America, HE8J 19A321 AB enUSA, Edition date: 201607, Second Printing

Fuse Number	Fuse Rating	Protected Component
F41	10A	Air conditioning clutch.
F42	7.5A	Powertrain control module. Transmission control module. Evaporative emission canister purge valve.
F48	10A	Left-hand front fog lamp.
F49	10A	Right-hand front fog lamp.
F55	10A	Left-hand high beam.
F56	10A	Right-hand high beam.

[1] 1.0L EcoBoost.

[2] 1.0L and 1.6L EcoBoost.

[3] 1.6L Sigma.

[4] 1.6L Flex-fuel.

[5] 1.6L Ecoboost.

[6] 6-Speed PowerShift Transmission.

Relay Number	Protected Component
R12	Powertrain control module relay.
R13	Headlamp high beam relay.
R43	Not used.
R44	Front fog lamp relay.
R45	A/C clutch relay.
R46	Not used.
R47	Fuel pump relay.
R50	High speed cooling fan.[1]
R51	Start inhibit relay.
R52	Blower motor relay.
R53	Not used.

2017 Fiesta (CCT) Canada/United States of America, HE8J 19A321 AB enUSA, Edition date: 201607, Second Printing

Relay Number	Protected Component
R54	Reversing lamp.
R57	Cooling fan relay.

[1] 1.0L and 1.6L EcoBoost.

Passenger Compartment Fuse Box

The fuse box is behind the glove compartment.

1. Open the glove compartment and empty the contents.
2. Press the sides inward and swivel the glove compartment downward.

2017 Fiesta (CCT) Canada/United States of America, HE8J 19A321 AB enUSA, Edition date: 201607, Second Printing

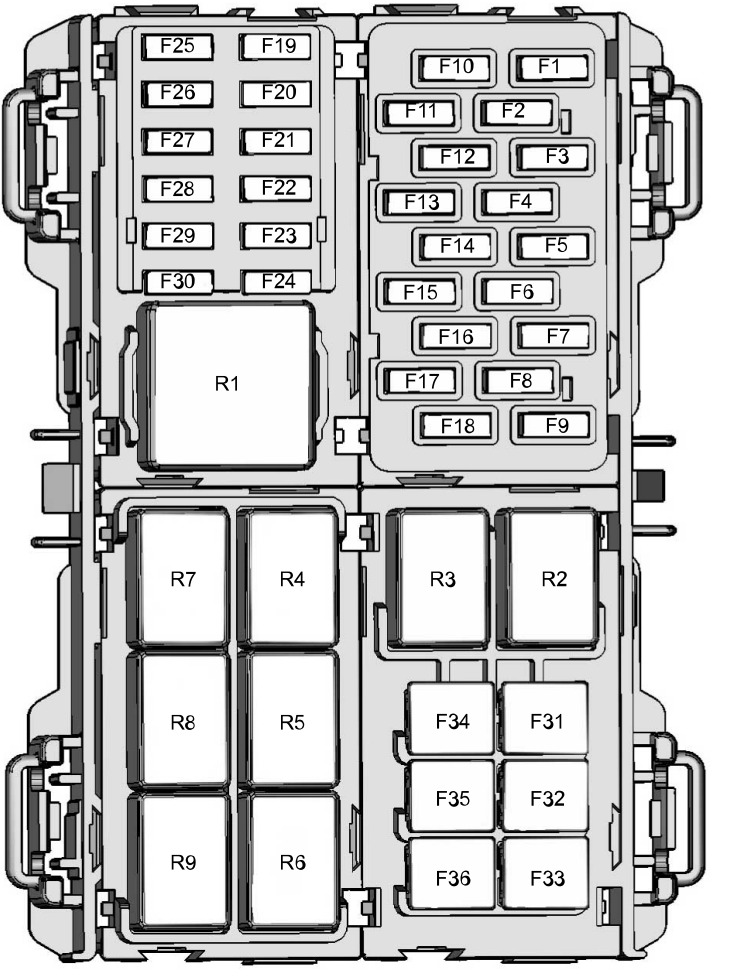

E156756

2017 Fiesta (CCT) Canada/United States of America, HE8J 19A321 AB enUSA, Edition date: 201607, Second Printing

Fuse Number	Fuse Rating	Protected Component
F1	15A	Ignition switch.
F2	7.5A	Auto-dimming interior mirror. Autowipers. Heater relay control.
F3	7.5A	Instrument cluster.
F4	7.5A	Passenger airbag deactivation switch. Passenger sensing system.
F5	15A	Secondary on-board diagnostic control module.
F6	10A	Reversing lamps.
F7	7.5A	Instrument cluster. Information and entertainment display.
F8	7.5A	Moonroof.
F9	20A	Remote keyless entry. Remote keyless starting.
F10	15A	Audio unit. SYNC module.
F11	20A	Windshield wipers.
F12	7.5A	Climate control.
F13	15A	Rear window wiper.
F14	20A	Remote keyless entry. Remote keyless starting.
F15	15A	Windshield wipers.
F16	5A	Exterior mirrors. Power windows.
F17	15A	Heated seats.
F18	10A	Brake lamp.
F19	7.5A	Instrument cluster.
F20	10A	Airbags.
F21	7.5A	Electronic power assist steering. Instrument cluster.

2017 Fiesta (CCT) Canada/United States of America, HE8J 19A321 AB enUSA, Edition date: 201607, Second Printing

Fuse Number	Fuse Rating	Protected Component
		Ignition. Windshield wipers. Passive anti-theft system.
F22	7.5A	Accelorator position sensor. Powertrain control module. Anti-lock brake system. Stability assist.
F23	7.5A	Transmission control unit.
F24	7.5A	Audio unit.
F25	7.5A	Heated exterior mirrors.
F26	7.5A	Central locking system.
F27	-	Not used.
F28	-	Not used.
F29	-	Not used.
F30	-	Not used.
F31	30A	Rear power windows.
F32	20A	Battery back-up sounder. Rear auxiliary power points.
F33	20A	Auxiliary power points.
F34	30A	Front power windows.
F35	20A	Moonroof.
F36	-	Not used.

Relay Number	Protected Component
R1	Ignition relay.
R2	Not used.
R3	Not used.
R4	Driver heated seat.
R5	Passenger heated seat.

2017 Fiesta (CCT) Canada/United States of America, HE8J 19A321 AB enUSA, Edition date: 201607, Second Printing

Relay Number	Protected Component
R6	Accessory mode remote keyless starting.
R7	Ignition mode remote keyless starting.
R8	Battery back-up sounder. Battery saver.
R9	Accessory delay.

CHANGING A FUSE

Fuses

WARNING

Always replace a fuse with one that has the specified amperage rating. Using a fuse with a higher amperage rating can cause severe wire damage and could start a fire.

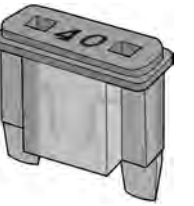

E217331

If electrical components in the vehicle are not working, a fuse may have blown. Blown fuses are identified by a broken wire within the fuse. Check the appropriate fuses before replacing any electrical components.

2017 Fiesta (CCT) Canada/United States of America, HE8J 19A321 AB enUSA, Edition date: 201607, Second Printing

Fuse Types

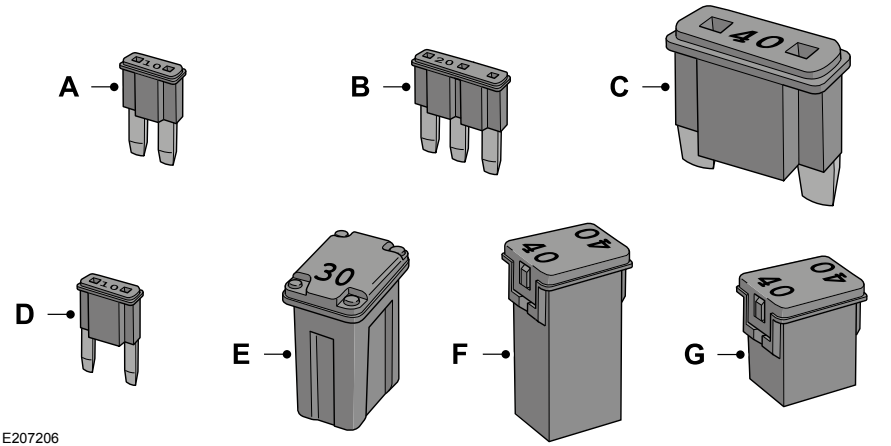

Callout	Fuse Type
A	Micro 2
B	Micro 3
C	Maxi
D	Mini
E	M Case
F	J Case
G	J Case Low Profile

2017 Fiesta (CCT) Canada/United States of America, HE8J 19A321 AB enUSA, Edition date: 201607, Second Printing

GENERAL INFORMATION

Have your vehicle serviced regularly to help maintain its roadworthiness and resale value. There is a large network of authorized dealers that are there to help you with their professional servicing expertise. We believe that their specially trained technicians are best qualified to service your vehicle properly and expertly. They are supported by a wide range of highly specialized tools developed specifically for servicing your vehicle.

If your vehicle requires professional service, an authorized dealer can provide the necessary parts and service. Check your warranty information to find out which parts and services are covered.

Use only recommended fuels, lubricants, fluids and service parts conforming to specifications. Motorcraft® parts are designed and built to provide the best performance in your vehicle.

Precautions

- Do not work on a hot engine.
- Make sure that nothing gets caught in moving parts.
- Do not work on a vehicle with the engine running in an enclosed space, unless you are sure you have enough ventilation.
- Keep all open flames and other burning material (such as cigarettes) away from the battery and all fuel related parts.

Working with the Engine Off

1. Set the parking brake and shift to park (P).
2. Switch off the engine.
3. Block the wheels.

Working with the Engine On

WARNING

To reduce the risk of vehicle damage and/or personal burn injuries, do not start your engine with the air cleaner removed and do not remove it while the engine is running.

1. Set the parking brake and shift to park (P).
2. Block the wheels.

OPENING AND CLOSING THE HOOD

Opening the Hood

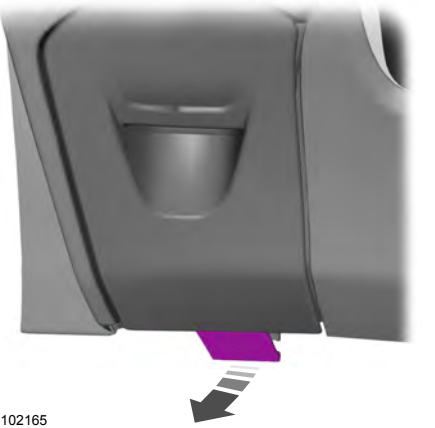

E102165

1. Pull the hood release lever.
2. Slightly lift the hood.

2017 Fiesta (CCT) Canada/United States of America, HE8J 19A321 AB enUSA, Edition date: 201607, Second Printing

E163236

3. Move the catch to the left to release the hood.

E87786

4. Open the hood and support it with the hood strut.

Closing the Hood

1. Remove the hood strut from the catch and secure it correctly in the clip.
2. Lower the hood and allow it to drop under its own weight for the last 8-12 in (20-30 cm).

Note: *Make sure that the hood is correctly closed.*

2017 Fiesta (CCT) Canada/United States of America, HE8J 19A321 AB enUSA, Edition date: 201607, Second Printing

UNDER HOOD OVERVIEW - 1.0L ECOBOOST™

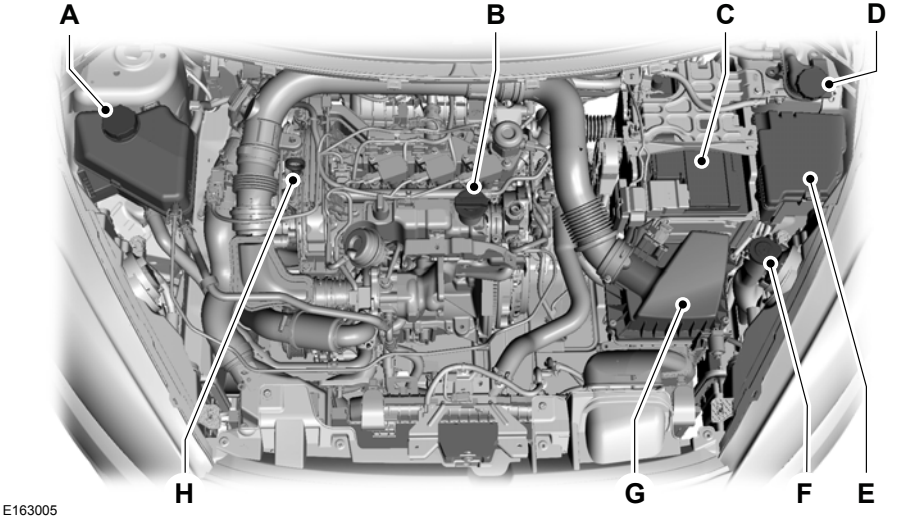

A Engine coolant reservoir*: See **Engine Coolant Check** (page 188).

B Engine oil filler cap*: See **Engine Oil Check** (page 186).

C Battery: See **Changing the 12V Battery** (page 193).

D Brake and clutch fluid reservoir*: See **Brake Fluid Check** (page 192).

E Engine compartment fuse box:

F Windshield and rear window washer fluid reservoir: See **Washer Fluid Check** (page 193).

G Air cleaner: See **Changing the Engine Air Filter** (page 209).

H Engine oil dipstick*: See **Engine Oil Check** (page 186).

* The filler caps and the engine oil dipstick are colored for easy identification.

2017 Fiesta (CCT) Canada/United States of America, HE8J 19A321 AB enUSA, Edition date: 201607, Second Printing

UNDER HOOD OVERVIEW - 1.6L DURATEC-16V TI-VCT (SIGMA)

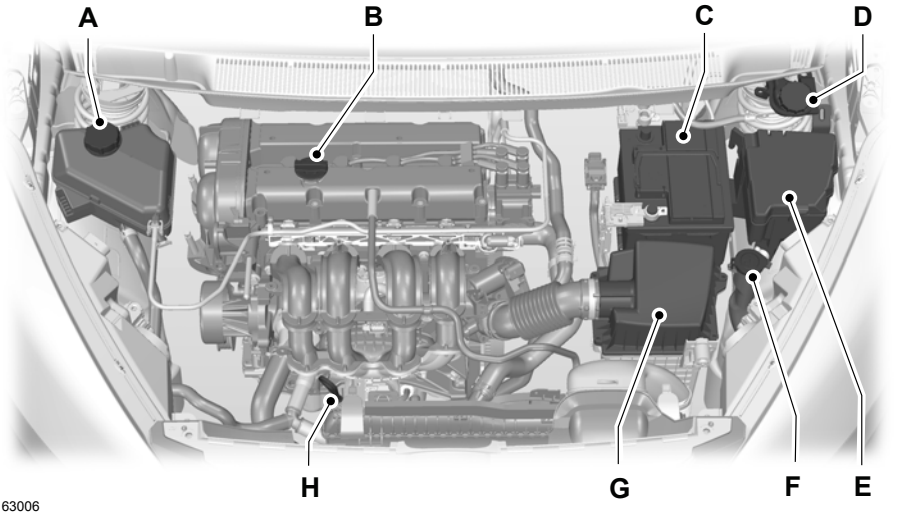

E163006

A Engine coolant reservoir*: See **Engine Coolant Check** (page 188).

B Engine oil filler cap*: See **Engine Oil Check** (page 186).

C Battery: See **Changing the 12V Battery** (page 193).

D Brake and clutch fluid reservoir : See **Brake Fluid Check** (page 192).

E Engine compartment fuse box:

F Windshield and rear window washer fluid reservoir: See **Washer Fluid Check** (page 193).

G Air cleaner: See **Changing the Engine Air Filter** (page 209).

H Engine oil dipstick*: See **Engine Oil Check** (page 186).

* The filler caps and the engine oil dipstick are colored for easy identification.

2017 Fiesta (CCT) Canada/United States of America, HE8J 19A321 AB enUSA, Edition date: 201607, Second Printing

ENGINE OIL DIPSTICK - 1.0L ECOBOOST™

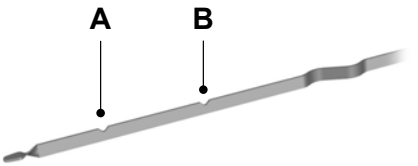

E141337

A Minimum

B Maximum

ENGINE OIL DIPSTICK - 1.6L DURATEC-16V TI-VCT (SIGMA)

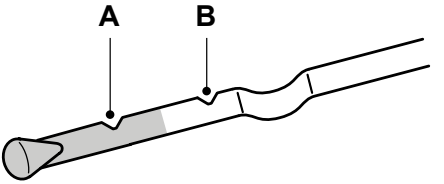

E95540

A Minimum

B Maximum

ENGINE OIL CHECK

WARNING

Do not work on a hot engine.

To check the engine oil level consistently and accurately, do the following:

1. Make sure the parking brake is on. Make sure the transmission is in park (P) or neutral (N).
2. Run the engine until it reaches normal operating temperature.
3. Make sure that your vehicle is on level ground.
4. Switch the engine off and wait 15 minutes for the oil to drain into the oil pan. Checking the engine oil level too soon after you switch the engine off may result in an inaccurate reading.
5. Open the hood. See **Opening and Closing the Hood** (page 182).
6. Remove the dipstick and wipe it with a clean, lint-free cloth. See **Under Hood Overview** (page 184).
7. Replace the dipstick and remove it again to check the oil level. See **Engine Oil Dipstick** (page 186).
8. Make sure that the oil level is between the maximum and minimum marks. If the oil level is at the minimum mark, add oil immediately. See **Capacities and Specifications** (page 250).
9. If the oil level is correct, replace the dipstick and make sure it is fully seated.

Note: *Do not remove the dipstick when the engine is running.*

Note: *If the oil level is between the maximum and minimum marks, the oil level is acceptable. Do not add oil.*

Note: *The oil consumption of new engines reaches its normal level after approximately 3,000 mi (5,000 km).*

Adding Engine Oil

WARNINGS

Do not add engine oil when the engine is hot. Failure to follow this instruction could result in personal injury.

2017 Fiesta (CCT) Canada/United States of America, HE8J 19A321 AB enUSA, Edition date: 201607, Second Printing

WARNINGS

Do not remove the filler cap when the engine is running.

Do not use supplemental engine oil additives because they are unnecessary and could lead to engine damage that may not be covered by the vehicle Warranty.

E142732

Only use oils certified for gasoline engines by the American Petroleum Institute (API). An oil with this trademark symbol conforms to the current engine and emission system protection standards and fuel economy requirements of the International Lubricants Specification Advisory Committee (ILSAC).

To top up the engine oil level do the following:

1. Clean the area surrounding the engine oil filler cap before you remove it.
2. Remove the engine oil filler cap. See **Under Hood Overview** (page 184). Turn it counterclockwise and remove it.
3. Add engine oil that meets Ford specifications. See **Capacities and Specifications** (page 250). See **Capacities and Specifications** (page 253). You may have to use a funnel to pour the engine oil into the opening.
4. Recheck the oil level.
5. If the oil level is correct, replace the dipstick and make sure it is fully seated.
6. Replace the engine oil filler cap. Turn it clockwise until you feel a strong resistance.

Note: *Do not add oil further than the maximum mark. Oil levels above the maximum mark may cause engine damage.*

Note: *Make sure you install the oil filler cap correctly.*

Note: *Soak up any spillage with an absorbent cloth immediately.*

OIL CHANGE INDICATOR RESET (If Equipped)

Resetting the Oil Life Monitoring System

Only reset the oil life monitoring system after changing the engine oil and oil filter.

1. Switch the ignition on. Do not start the engine.
2. Press the accelerator and brake pedals at the same time.
3. Keep the accelerator and brake pedals fully pressed.
4. After three seconds, a message confirming that the reset is in progress displays.
5. After 25 seconds, a message confirming that the reset is complete displays.
6. Release the accelerator and brake pedals.
7. The message confirming that the reset is complete no longer displays.
8. Switch the ignition off.

2017 Fiesta (CCT) Canada/United States of America, HE8J 19A321 AB enUSA, Edition date: 201607, Second Printing

ENGINE COOLING FAN

WARNING

Keep your hands and clothing clear of the engine cooling fan.

Under certain conditions, the engine cooling fan may continue to run for several minutes after you switch your vehicle off.

ENGINE COOLANT CHECK

WARNINGS

Do not remove the coolant reservoir cap when the cooling system is hot. Wait 10 minutes for the cooling system to cool down. Cover the coolant reservoir cap with a thick cloth to prevent the possibility of scalding and slowly remove the cap. Failure to follow this instruction could result in personal injury.

Do not put coolant in the windshield washer fluid reservoir. If sprayed on the windshield, coolant could make it difficult to see through the windshield.

To reduce the risk of personal injury, make sure the engine is cool before unscrewing the coolant pressure relief cap. The cooling system is under pressure. Steam and hot liquid can come out forcefully when you loosen the cap slightly.

Do not add coolant further than the ***MAX*** mark.

When the engine is cold, check the concentration and level of the coolant at the intervals listed in the scheduled maintenance information. See **Scheduled Maintenance** (page 396).

Note: *Make sure that the coolant level is between the **MIN** and **MAX** marks on the coolant reservoir.*

Note: *Coolant expands when it is hot. The level may extend beyond the **MAX** mark.*

Maintain coolant concentration within 48% to 50%, which equates to a freeze point between -30ºF (-34ºC) and -34ºF (-37ºC). Coolant concentration should be checked using a refractometer. We do not recommend the use of hydrometers or coolant test strips for measuring coolant concentration.

Adding Coolant

WARNING

Never remove the coolant reservoir cap when the engine is running or hot.

Note: *Automotive fluids are not interchangeable. Take care not to put engine coolant in the windshield washer fluid reservoir or windshield washer fluid in the engine coolant reservoir.*

Note: *Do not use stop leak pellets, cooling system sealants, or non-specified additives as they can cause damage to the engine cooling or heating systems. Resulting component damage may not be covered by the vehicle Warranty.*

It is very important to use prediluted coolant approved to the correct specification in order to avoid plugging the small passageways in the engine cooling system. See **Capacities and Specifications** (page 243). Do not mix different colors or types of coolant in your vehicle. Mixing of engine coolants or using an incorrect coolant may harm the engine or cooling system components and may not be covered by the vehicle Warranty.

2017 Fiesta (CCT) Canada/United States of America, HE8J 19A321 AB enUSA, Edition date: 201607, Second Printing

Note: *If prediluted coolant is not available, use the approved concentrated coolant diluting it to 50/50 with distilled water. See* ***Capacities and Specifications*** *(page 243). Using water that has not been deionised may contribute to deposit formation, corrosion and plugging of the small cooling system passageways.*

Note: *Coolants marketed for all makes and models may not be approved to Ford specifications and may cause damage to the cooling system. Resulting component damage may not be covered by the vehicle Warranty.*

If the coolant level is at or below the minimum mark, add prediluted coolant immediately.

To top up the coolant level do the following:

1. Unscrew the cap slowly. Any pressure escapes as you unscrew the cap.
2. Add prediluted coolant approved to the correct specification. See **Capacities and Specifications** (page 243).
3. Add enough prediluted coolant to reach the correct level.
4. Replace the coolant reservoir cap, turn it clockwise until you feel a strong resistance.
5. Check the coolant level in the coolant reservoir the next few times you drive your vehicle. If necessary, add enough prediluted engine coolant to bring the coolant level to the correct level.

If you have to add more than 1.1 qt (1 L) of engine coolant per month, have your vehicle checked as soon as possible. Operating an engine with a low level of coolant can result in engine overheating and possible engine damage.

Note: *During normal vehicle operation, the coolant may change color from orange to pink or light red. As long as the coolant is clear and uncontaminated, this color change does not indicate the coolant has degraded nor does it require the coolant to be drained, the system to be flushed, or the coolant to be replaced.*

In case of emergency, you can add a large amount of water without engine coolant in order to reach a vehicle service location. In this instance, qualified personnel:

1. Must drain the cooling system.
2. Chemically clean the coolant system with Motorcraft Premium Cooling System Flush.
3. Refill with engine coolant as soon as possible.

Water alone, without engine coolant, can cause engine damage from corrosion, overheating or freezing.

Do not use the following as a coolant substitute:

- Alcohol.
- Methanol.
- Brine.
- Any coolant mixed with alcohol or methanol antifreeze.

Alcohol and other liquids can cause engine damage from overheating or freezing.

Do not add extra inhibitors or additives to the coolant. These can be harmful and compromise the corrosion protection of the coolant.

Recycled Coolant

We do not recommend the use of recycled coolant as an approved recycling process is not yet available.

2017 Fiesta (CCT) Canada/United States of America, HE8J 19A321 AB enUSA, Edition date: 201607, Second Printing

Dispose of used engine coolant in an appropriate manner. Follow your community's regulations and standards for recycling and disposing of automotive fluids.

Severe Climates

If you drive in extremely cold climates:

- It may be necessary to increase the coolant concentration above 50%.
- A coolant concentration of 60% provides improved freeze point protection. Coolant concentrations above 60% decrease the overheat protection characteristics of the coolant and may cause engine damage.

If you drive in extremely hot climates:

- You can decrease the coolant concentration to 40%.
- Coolant concentrations below 40% decrease the freeze and corrosion protection characteristics of the coolant and may cause engine damage.

Vehicles driven year-round in non-extreme climates should use prediluted coolant for optimum cooling system and engine protection.

Coolant Change

At specific mileage intervals, as listed in the scheduled maintenance information, the coolant should be changed. Add prediluted coolant approved to the correct specification. See **Capacities and Specifications** (page 243).

Fail-Safe Cooling

Fail-safe cooling allows you to temporarily drive your vehicle before any incremental component damage occurs. The fail-safe distance depends on ambient temperature, vehicle load and terrain.

How Fail-Safe Cooling Works

If the engine begins to overheat, the coolant temperature gauge moves toward the red zone:

A warning lamp illuminates and a message may appear in the information display.

If the engine reaches a preset over-temperature condition, the engine automatically switches to alternating cylinder operation. Each disabled cylinder acts as an air pump and cools the engine.

When this occurs, your vehicle still operates, however:

- Engine power is limited.
- The air conditioning system turns off.

Continued operation increases the engine temperature, causing the engine to completely shut down. Your steering and braking effort increases in this situation.

When the engine temperature cools, you can re-start the engine. Have your vehicle checked as soon as possible to minimize engine damage.

When Fail-Safe Mode Is Activated

WARNINGS

Fail-safe mode is for use during emergencies only. Operate your vehicle in fail-safe mode only as long as necessary to bring your vehicle to rest in a safe location and seek immediate repairs. When in fail-safe mode, your vehicle will have limited power, will not be able to maintain high-speed operation, and may completely shut down without warning, potentially losing engine power, power steering assist, and power brake assist, which may increase the possibility of a crash resulting in serious injury.

2017 Fiesta (CCT) Canada/United States of America, HE8J 19A321 AB enUSA, Edition date: 201607, Second Printing

WARNINGS

Never remove the coolant reservoir cap when the engine is running or hot.

Your vehicle has limited engine power when in the fail-safe mode, drive your vehicle with caution. Your vehicle does not maintain high-speed operation and the engine may operate poorly.

Remember that the engine is capable of automatically shutting down to prevent engine damage. In this situation:

1. Pull off the road as soon as safely possible and switch the engine off.
2. If you are a member of a roadside assistance program, we recommend that you contact your roadside assistance service provider.
3. If this is not possible, wait a short period for the engine to cool.
4. Check the coolant level. If the coolant level is at or below the minimum mark, add prediluted coolant immediately.
5. When the engine temperature cools, you can re-start the engine. Have your vehicle checked as soon as possible to minimize engine damage.

Note: *Driving your vehicle without repair increases the chance of engine damage.*

Engine Coolant Temperature Management (If Equipped)

WARNING

To reduce the risk of crash and injury, be prepared that the vehicle speed may reduce and the vehicle may not be able to accelerate with full power until the coolant temperature reduces.

If you tow a trailer with your vehicle, the engine may temporarily reach a higher temperature during severe operating conditions, for example ascending a long or steep grade in high ambient temperatures.

At this time, you may notice the coolant temperature gauge moves toward the red zone and a message may appear in the information display.

You may notice a reduction in vehicle speed caused by reduced engine power in order to manage the engine coolant temperature. Your vehicle may enter this mode if certain high-temperature and high-load conditions take place. The amount of speed reduction depends on vehicle loading, grade and ambient temperature. If this occurs, there is no need to pull off the road. You can continue to drive your vehicle.

The air conditioning may automatically turn on and off during severe operating conditions to protect the engine from overheating. When the coolant temperature decreases to the normal operating temperature, the air conditioning turns on.

If the coolant temperature gauge moves fully into the red zone, or if the coolant temperature warning or service engine soon messages appear in your information display, do the following:

1. Pull off the road as soon as safely possible and shift the transmission into park **(P)**.
2. Leave the engine running until the coolant temperature gauge needle returns to the normal position. After several minutes, if the temperature does not drop, follow the remaining steps.
3. Switch the engine off and wait for it to cool. Check the coolant level.

2017 Fiesta (CCT) Canada/United States of America, HE8J 19A321 AB enUSA, Edition date: 201607, Second Printing

4. If the coolant level is at or below the minimum mark, add prediluted coolant immediately.
5. If the coolant level is normal, restart the engine and continue.

AUTOMATIC TRANSMISSION FLUID CHECK

The automatic transmission does not have a transmission fluid dipstick.

Have an authorized dealer check and change the transmission fluid at the correct service interval. See **Scheduled Maintenance** (page 396). Your transmission does not consume fluid. However, if the transmission slips, shifts slowly or if you notice a sign of leaking fluid, contact an authorized dealer.

Do not use supplemental transmission fluid additives, treatments or cleaning agents. The use of these materials may affect transmission operation and result in damage to internal transmission components.

BRAKE FLUID CHECK

WARNINGS

Do not use any fluid other than the recommended brake fluid as this will reduce brake efficiency. Use of incorrect fluid could result in the loss of vehicle control, serious personal injury or death.

Only use brake fluid from a sealed container. Contamination with dirt, water, petroleum products or other materials may result in brake system damage or failure. Failure to adhere to this warning could result in the loss of vehicle control, serious personal injury or death.

WARNINGS

Do not allow the fluid to touch your skin or eyes. If this happens, rinse the affected areas immediately with plenty of water and contact your physician.

A fluid level between the ***MAX*** and ***MIN*** lines is within the normal operating range and there is no need to add fluid. A fluid level not in the normal operating range could compromise the performance of the system. Have your vehicle checked immediately.

E170684

To avoid fluid contamination, the reservoir cap must remain in place and fully tight, unless you are adding fluid.

Only use fluid that meets Ford specifications. See **Capacities and Specifications** (page 243).

2017 Fiesta (CCT) Canada/United States of America, HE8J 19A321 AB enUSA, Edition date: 201607, Second Printing

CLUTCH FLUID CHECK - MANUAL TRANSMISSION

The clutch and brake systems share the same fluid reservoir. See **Brake Fluid Check** (page 192).

WASHER FLUID CHECK

Note: *The reservoir supplies the front and rear washer systems.*

When adding fluid, use a mixture of washer fluid and water to help prevent freezing in cold weather and improve the cleaning capability. We recommend that you use only high quality washer fluid.

For information on fluid dilution, refer to the product instructions.

CHANGING THE 12V BATTERY

WARNINGS

Batteries normally produce explosive gases which can cause personal injury. Therefore, do not allow flames, sparks or lighted substances to come near the battery. When working near the battery, always shield your face and protect your eyes. Always provide correct ventilation.

When lifting a plastic-cased battery, excessive pressure on the end walls could cause acid to flow through the vent caps, resulting in personal injury and damage to the vehicle or battery. Lift the battery with a battery carrier or with your hands on opposite corners.

WARNINGS

Keep batteries out of reach of children. Batteries contain sulfuric acid. Avoid contact with skin, eyes or clothing. Shield your eyes when working near the battery to protect against possible splashing of acid solution. In case of acid contact with skin or eyes, flush immediately with water for a minimum of 15 minutes and get prompt medical attention. If acid is swallowed, call a physician immediately.

Battery posts, terminals and related accessories contain lead and lead compounds. Wash hands after handling.

For vehicles with Auto-Start-Stop the battery requirement is different. You must replace the battery with one of exactly the same specification.

The battery is located in the engine compartment. See **Under Hood Overview** (page 184).

Your vehicle has a maintenance-free battery. It does not require additional water during service.

If your vehicle battery has a cover, make sure you correctly install it after cleaning or replacing the battery.

For longer, trouble-free operation, keep the top of the battery clean and dry and the battery cables tightly fastened to the battery terminals. If any corrosion is present on the battery or terminals, remove the cables from the terminals and clean with a wire brush. You can neutralize the acid with a solution of baking soda and water.

We recommend that you disconnect the negative battery cable terminal from the battery if you plan to store your vehicle for an extended period.

2017 Fiesta (CCT) Canada/United States of America, HE8J 19A321 AB enUSA, Edition date: 201607, Second Printing

To maintain correct operation of the battery management system, if you add any electrical devices to your vehicle, do not connect the ground connection directly to the negative battery terminal. A connection at the negative battery terminal can cause inaccurate measurements of the battery condition and potential incorrect system operation.

Note: *Electrical accessories or components added to your vehicle by you or an authorized dealer, may adversely affect battery performance, durability and the performance of other electrical systems on your vehicle.*

If a replacement battery is required, we recommend you use a Ford replacement battery that matches the electrical requirements of your vehicle.

If you disconnect or replace the battery and your vehicle has an automatic transmission, transmission must relearn its adaptive strategy. Because of this, the transmission may shift firmly when first driven. This is normal operation while the transmission fully updates its operation to optimum shift feel.

Remove and Reinstall the Battery

To disconnect or remove the battery, do the following:

1. Apply the parking brake and switch the ignition off.
2. Switch all electrical equipment off, for example lights and radio.
3. Wait a minimum of two minutes before disconnecting the battery.

Note: *The engine management system has a power hold function and remains powered for a period after you switch the ignition off. This is to allow diagnostic and adaptive tables to be stored. Disconnecting the battery without waiting can cause damage not covered by the vehicle Warranty.*

4. Disconnect the negative (-) battery cable terminal first.
5. Disconnect the positive (+) battery cable terminal last.
6. Remove the battery securing clamp.
7. Remove the battery.
8. Install in the reverse order.

Note: *Before reconnecting the battery, make sure the ignition remains switched off.*

Note: *If you only disconnect the negative battery cable terminal, make sure it is isolated or placed away from the battery terminal to avoid un-intended connection or arcing.*

Note: *Make sure the battery cable terminals are fully tightened.*

Note: *If you disconnect or replace the battery, you must reset the clock and the pre-set radio stations once the battery is reconnected.*

Battery Disposal

Make sure that you dispose of old batteries in an environmentally friendly way. Seek advice from your local authority about recycling old batteries.

CHECKING THE WIPER BLADES

E142463

Run the tip of your fingers over the edge of the blade to check for roughness.

2017 Fiesta (CCT) Canada/United States of America, HE8J 19A321 AB enUSA, Edition date: 201607, Second Printing

Clean the wiper blades with washer fluid or water applied with a soft sponge or cloth.

CHANGING THE FRONT WIPER BLADES

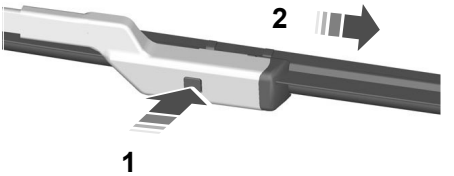

E72899

1. Lift the wiper arm and then press the wiper blade locking button.

Note: *Do not hold the wiper blade to lift the wiper arm.*

2. Remove the wiper blade.

Note: *Make sure that the wiper arm does not spring back against the glass when the wiper blade is not attached.*

3. To install, reverse the removal procedure.

Note: *Make sure that the wiper blade locks into place.*

CHANGING THE REAR WIPER BLADES

Note: *Do not hold the wiper blade when lifting the wiper arm.*

Note: *Make sure that the wiper arm does not spring back against the glass when the wiper blade is not attached.*

1. Lift the wiper arm.

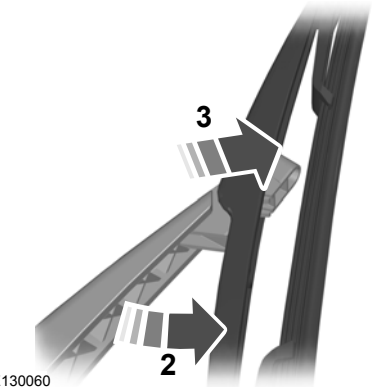

E130060

2. Slightly rotate the wiper blade.
3. Disengage the wiper blade from the wiper arm.
4. Remove the wiper blade.
5. Install in the reverse order.

Note: *Make sure that the wiper blade locks into place.*

ADJUSTING THE HEADLAMPS

Vertical Aim Adjustment

If your vehicle has been involved in an accident, have the alignment of your headlamps checked by an authorized dealer.

2017 Fiesta (CCT) Canada/United States of America, HE8J 19A321 AB enUSA, Edition date: 201607, Second Printing

Headlamp Aiming Target

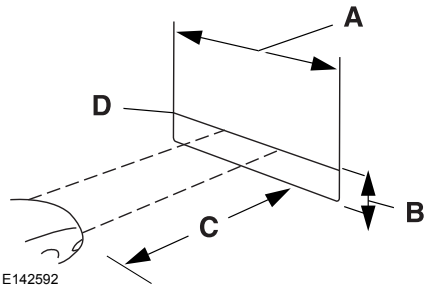

A	8 feet (2.4 meters)
B	Center height of lamp to ground
C	25 feet (7.6 meters)
D	Horizontal reference line

Vertical Aim Adjustment Procedure

1. Park your vehicle directly in front of a wall or screen on a level surface, approximately 25 feet (7.6 meters) away.
2. Measure the height of the headlamp bulb center from the ground and mark an 8 foot (2.4 meter) horizontal reference line on the vertical wall or screen at this height.

Note: *To see a clearer light pattern for adjusting, you may want to block the light from one headlamp while adjusting the other.*

3. Turn on the low beam headlamps to illuminate the wall or screen and open the hood.

4. On the wall or screen you will observe a flat zone of high intensity light located at the top of the right hand portion of the beam pattern. If the top edge of the high intensity light zone is not at the horizontal reference line, adjust the headlamp.

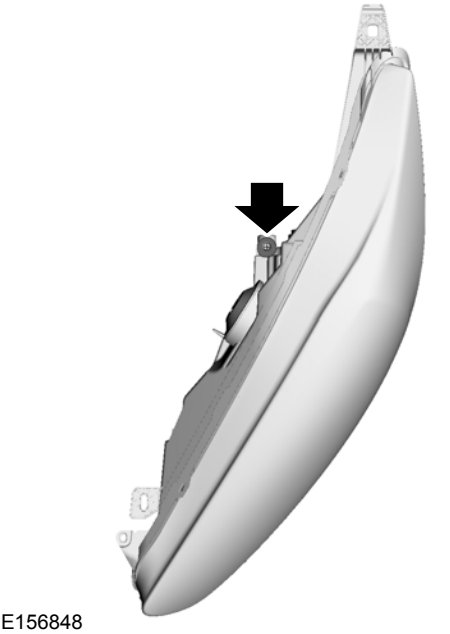

2017 Fiesta (CCT) Canada/United States of America, HE8J 19A321 AB enUSA, Edition date: 201607, Second Printing

5. Locate the vertical adjuster on each headlamp. Using a Phillips #2 screwdriver, turn the adjuster either clockwise or counterclockwise in order to adjust the vertical aim of the headlamp. The horizontal edge of the brighter light should touch the horizontal reference line.
6. Close the hood and turn the lamps off.

Horizontal Aim Adjustment

Horizontal aim is not required for this vehicle and is not adjustable.

REMOVING A HEADLAMP

1. Open the hood. See **Opening and Closing the Hood** (page 182).

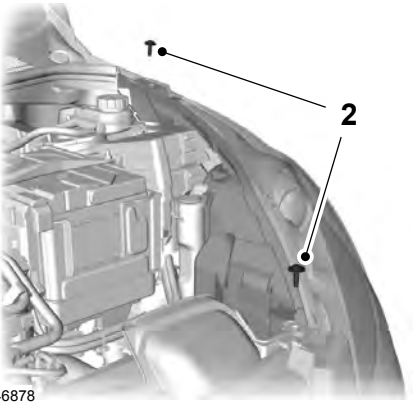

E146878

2. Remove the screws.

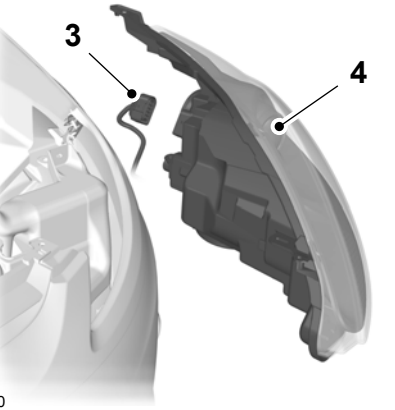

E102590

3. Disconnect the electrical connector.
4. Remove the headlamp.

Note: *When fitting the headlamp, make sure that you reconnect the electrical connector correctly.*

Note: *When fitting the headlamp, make sure that you fully engage the headlamp in the retaining clips.*

CHANGING A BULB - 5-DOOR

WARNINGS

Switch the lamps and the ignition off.

Let the bulb cool down before removing it.

Do not touch the glass of the bulb.

Note: *Only fit bulbs of the correct specification.*

Note: *The following instructions describe how to remove the bulbs. Fit replacements in the reverse order unless otherwise stated.*

2017 Fiesta (CCT) Canada/United States of America, HE8J 19A321 AB enUSA, Edition date: 201607, Second Printing

Headlamp

Note: *Remove the covers to gain access to the bulbs.*

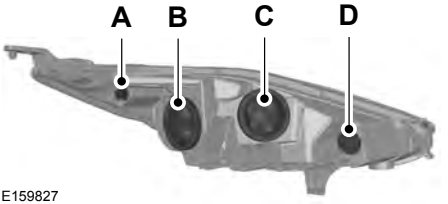

E159827

A	Side marker
B	Headlamp low beam
C	Headlamp high beam
D	Direction indicator

Side Marker

1. Remove the headlamp. See **Removing a Headlamp** (page 197).

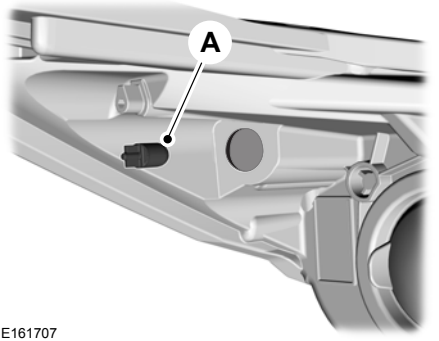

E161707

2. Remove the bulb holder.
3. Remove the bulb.

Headlamp Low Beam

1. Remove the headlamp. See **Removing a Headlamp** (page 197).

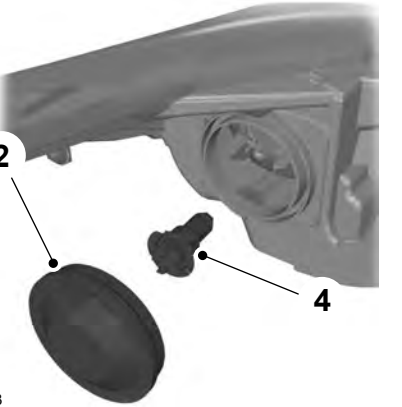

E146803

2. Remove the cover.
3. Disconnect the electrical connector.
4. Release the clip and remove the bulb.

Note: *Do not touch the glass of the bulb.*

Headlamp High Beam

1. Remove the headlamp. See **Removing a Headlamp** (page 197).

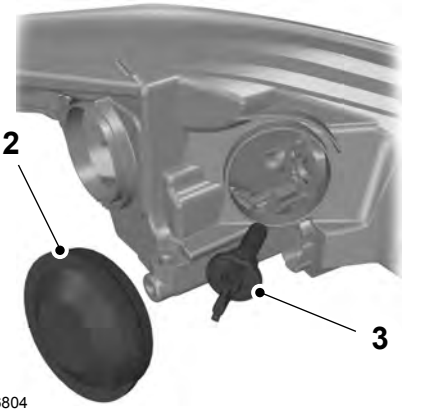

E146804

2. Remove the cover.

2017 Fiesta (CCT) Canada/United States of America, HE8J 19A321 AB enUSA, Edition date: 201607, Second Printing

3. Turn the bulb counterclockwise and remove it.

Note: *Do not touch the glass of the bulb.*

Direction Indicator

1. Remove the headlamp. See **Removing a Headlamp** (page 197).

E146805

2. Turn the bulb holder counterclockwise and remove it.
3. Gently press the bulb into the bulb holder, turn it counterclockwise and remove it.

Side Direction Indicator

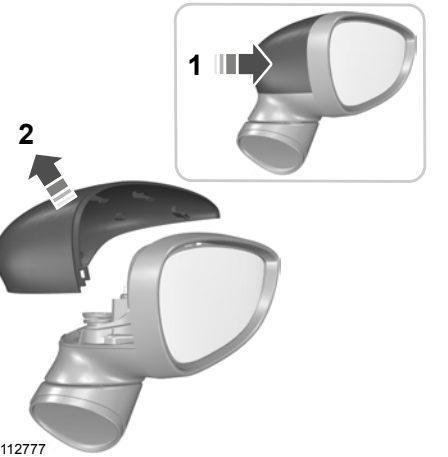

E112777

1. Press the side of the cover to release the clips.
2. Remove the cover.

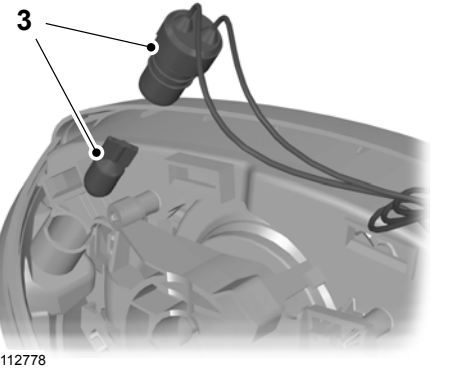

E112778

3. Remove the bulb and bulb holder. Remove the bulb.

2017 Fiesta (CCT) Canada/United States of America, HE8J 19A321 AB enUSA, Edition date: 201607, Second Printing

Front Fog Lamps

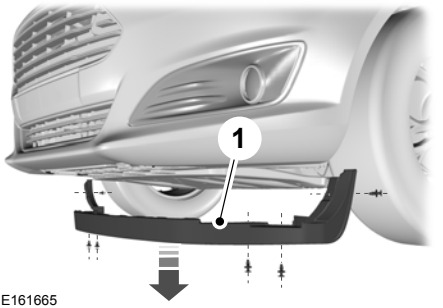

E161665

1. Remove the retaining clips to gain access to the lamp assembly.

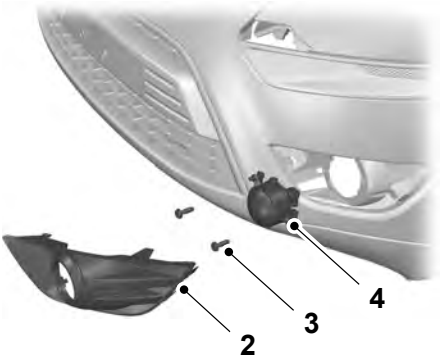

E161667

Note: *You cannot separate the fog lamp bulb from the bulb holder.*

2. Using a suitable implement, remove the cover.
3. Remove the screws.
4. Remove the lamp.

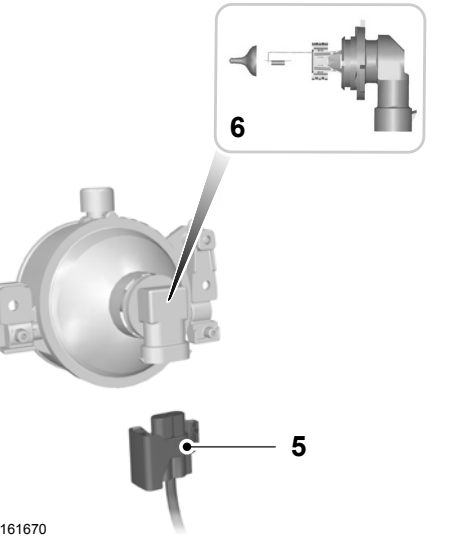

E161670

5. Disconnect the electrical connector.
6. Turn the bulb holder counterclockwise and remove it.

Rear Lamps

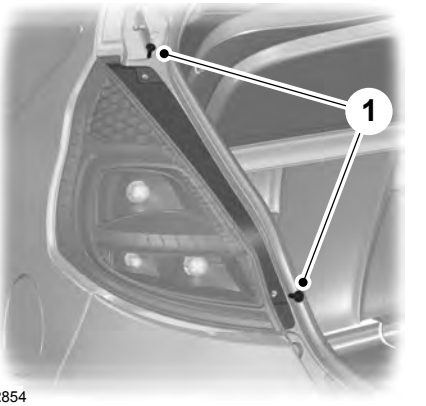

E102854

1. Remove the screws.

2017 Fiesta (CCT) Canada/United States of America, HE8J 19A321 AB enUSA, Edition date: 201607, Second Printing

E161671

2. Disconnect the electrical connector.
3. Turn the bulb holder counterclockwise and remove it.

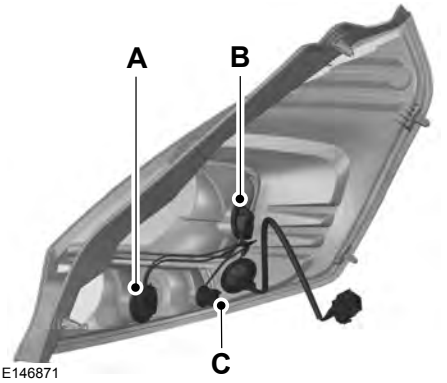

E146871

4. Gently press the bulb into the bulb holder, turn it counterclockwise and remove it.

A. Indicator
B. Tail and brake
C. Reverse

Center High Mounted Stop Lamp

Note: *The LED board is not a serviceable item, please consult your dealer if this fails.*

License Plate Lamp

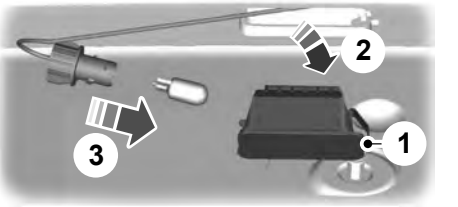

E72789

1. Carefully release the spring clip.
2. Remove the lamp.
3. Turn the bulb counterclockwise and remove it.

Interior Lamp

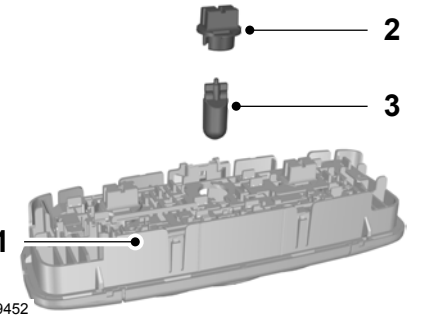

E99452

1. Carefully remove the lamp.
2. Turn the bulb holder counterclockwise and remove it.
3. Remove the bulb.

2017 Fiesta (CCT) Canada/United States of America, HE8J 19A321 AB enUSA, Edition date: 201607, Second Printing

Reading Lamps

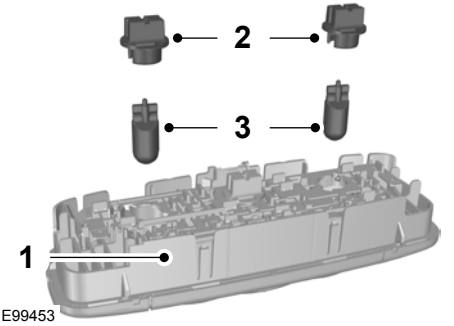

E99453

1. Carefully remove the lamp.
2. Turn the bulb holder counterclockwise and remove it.
3. Remove the bulb.

Luggage Compartment Lamp, Footwell Lamp and Liftgate Lamp

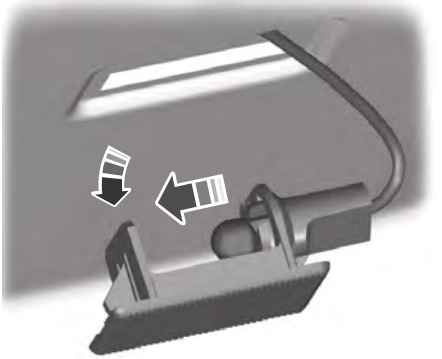

E72784

1. Carefully pry out the lamp.
2. Remove the bulb.

CHANGING A BULB - 4-DOOR

WARNINGS

Switch the lamps and the ignition off.

Let the bulb cool down before removing it.

Do not touch the glass of the bulb.

Note: *Only fit bulbs of the correct specification.*

Note: *The following instructions describe how to remove the bulbs. Fit replacements in the reverse order unless otherwise stated.*

Headlamp

Note: *Remove the covers to gain access to the bulbs.*

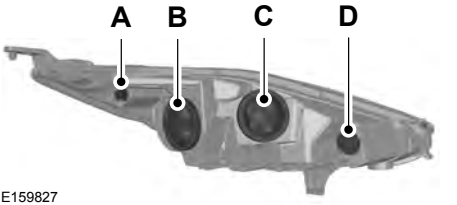

E159827

A	Side marker
B	Headlamp low beam
C	Headlamp high beam
D	Direction indicator

Side Marker

1. Remove the headlamp. See **Removing a Headlamp** (page 197).

2017 Fiesta (CCT) Canada/United States of America, HE8J 19A321 AB enUSA, Edition date: 201607, Second Printing

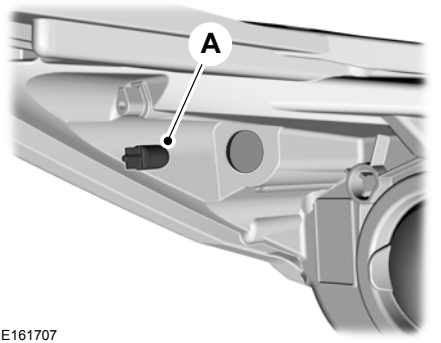

E161707

2. Remove the bulb holder.
3. Remove the bulb.

Headlamp Low Beam

1. Remove the headlamp. See **Removing a Headlamp** (page 197).

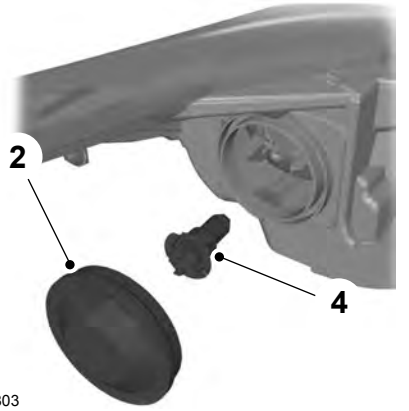

E146803

2. Remove the cover.
3. Disconnect the electrical connector.
4. Release the clip and remove the bulb.

Note: *Do not touch the glass of the bulb.*

Headlamp High Beam

1. Remove the headlamp. See **Removing a Headlamp** (page 197).

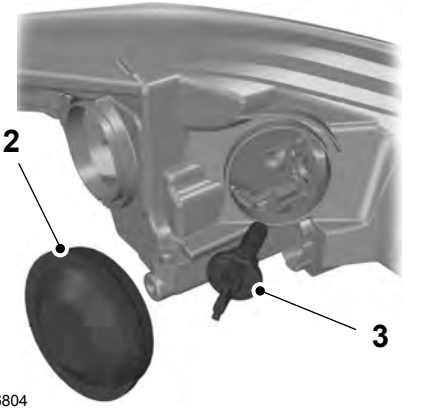

E146804

2. Remove the cover.
3. Turn the bulb counterclockwise and remove it.

Note: *Do not touch the glass of the bulb.*

Direction Indicator

1. Remove the headlamp. See **Removing a Headlamp** (page 197).

2017 Fiesta (CCT) Canada/United States of America, HE8J 19A321 AB enUSA, Edition date: 201607, Second Printing

E146805

2. Turn the bulb holder counterclockwise and remove it.
3. Gently press the bulb into the bulb holder, turn it counterclockwise and remove it.

Side Direction Indicator

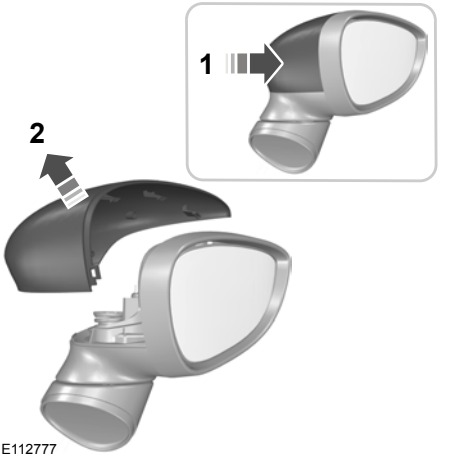

E112777

1. Press the side of the cover to release the clips.
2. Remove the cover.

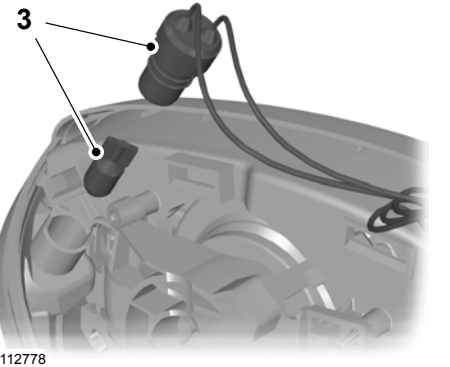

E112778

3. Remove the bulb and bulb holder. Remove the bulb.

Front Fog Lamps

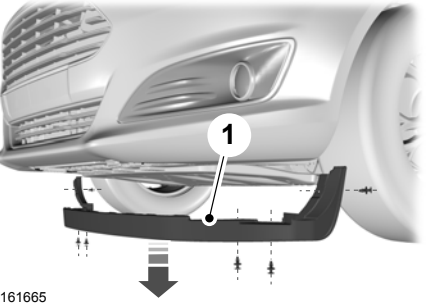

E161665

1. Remove the retaining clips to gain access to the lamp assembly.

2017 Fiesta (CCT) Canada/United States of America, HE8J 19A321 AB enUSA, Edition date: 201607, Second Printing

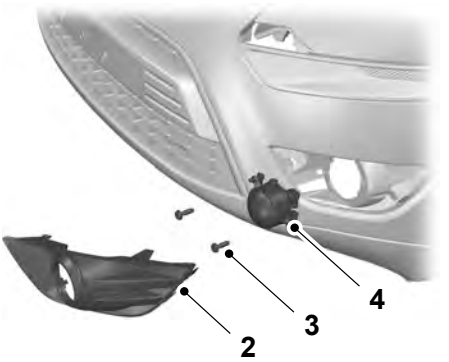

E161667

Note: *You cannot separate the fog lamp bulb from the bulb holder.*

2. Using a suitable implement, remove the cover.
3. Remove the screws.
4. Remove the lamp.

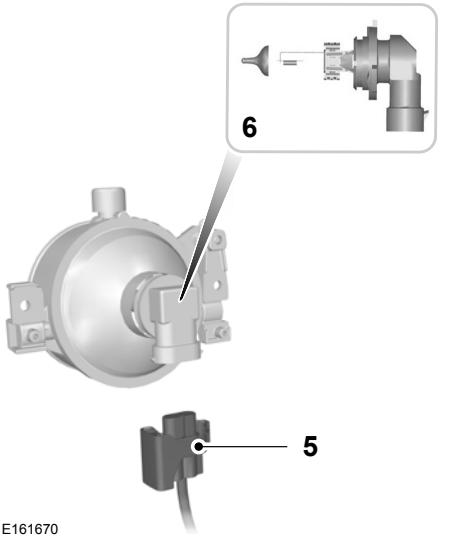

E161670

5. Disconnect the electrical connector.
6. Turn the bulb holder counterclockwise and remove it.

Rear Lamps

Brake, Tail and Direction Indicator Lamps

1. Remove the trim and disconnect the electrical connector.
2. Loosen the wing nut and carefully pull out the rear lamp.

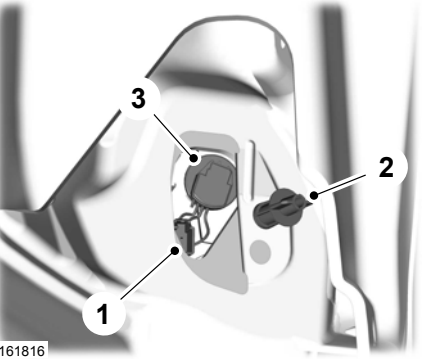

E161816

3. Unclip the bulb holder and remove it.
4. Remove the bulb.

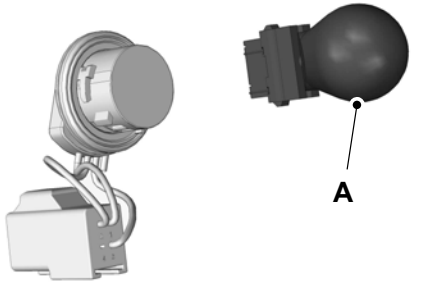

E161793

2017 Fiesta (CCT) Canada/United States of America, HE8J 19A321 AB enUSA, Edition date: 201607, Second Printing

Reversing Lamp

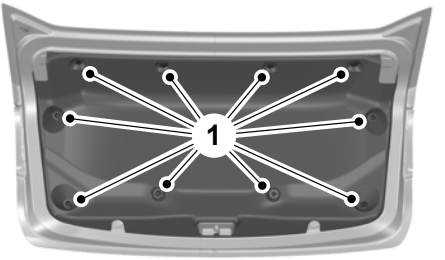

E113384

1. Remove the trim panel and disconnect the electrical connector.

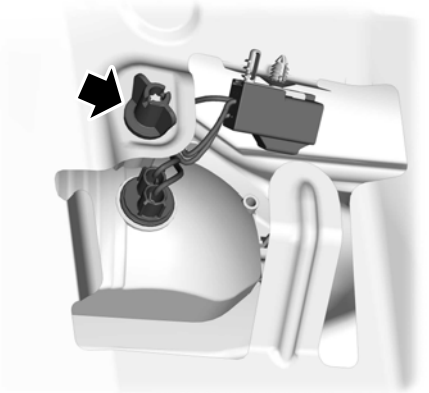

E161817

2. Loosen the wing nut and carefully pull out the rear lamp.

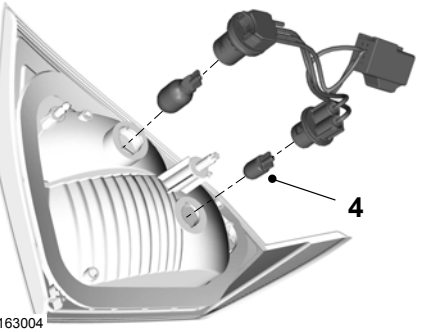

E163004

3. Turn the bulb holder counterclockwise and remove it.
4. Remove the bulb.

Center High Mounted Stop Lamp

Note: *The LED board is not a serviceable item, please consult your dealer if this fails.*

License Plate Lamp

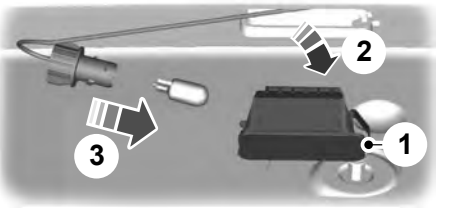

E72789

1. Carefully release the spring clip.
2. Remove the lamp.
3. Turn the bulb counterclockwise and remove it.

2017 Fiesta (CCT) Canada/United States of America, HE8J 19A321 AB enUSA, Edition date: 201607, Second Printing

Interior Lamp

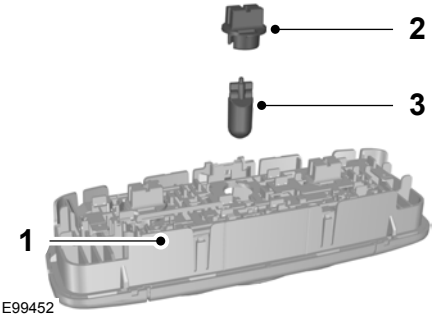

E99452

1. Carefully remove the lamp.
2. Turn the bulb holder counterclockwise and remove it.
3. Remove the bulb.

Reading Lamps

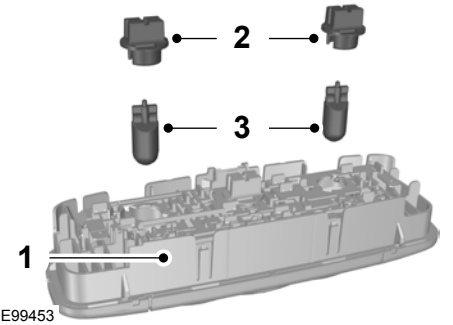

E99453

1. Carefully remove the lamp.
2. Turn the bulb holder counterclockwise and remove it.
3. Remove the bulb.

Luggage Compartment Lamp, Footwell Lamp and Liftgate Lamp

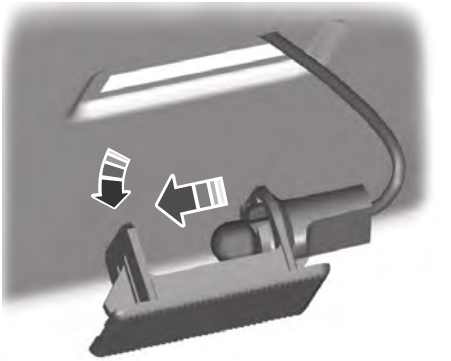

E72784

1. Carefully pry out the lamp.
2. Remove the bulb.

2017 Fiesta (CCT) Canada/United States of America, HE8J 19A321 AB enUSA, Edition date: 201607, Second Printing

BULB SPECIFICATION CHART

Exterior Lamps

Lamp	Specification	Power (watt)
Front direction indicator.	PY27/7	27/7
Headlamp low beam.	H11	55
Headlamp high beam.	H1LL	55
Front fog lamp.	H11	55
Side direction indicator.	WY5W	5
Rear lamp, brake lamp and rear direction indicator.	PY27/7	27/7
Reversing lamp.	W16W	16
License plate lamp.	W5W	5

Note: *On some vehicles the lamps are LED. These are not serviceable items, have your vehicle checked by an authorized dealer as soon as possible.*

Interior Lamps

Lamp	Specification	Power (watt)
Interior lamp.	W6W	6
Map lamp.	W5W	5
Luggage compartment lamp.	W6W	6

2017 Fiesta (CCT) Canada/United States of America, HE8J 19A321 AB enUSA, Edition date: 201607, Second Printing

CHANGING THE ENGINE AIR FILTER

WARNING

To reduce the risk of vehicle damage and personal burn injuries, do not start your engine with the air cleaner removed and do not remove it while the engine is running.

When changing the air filter element, use only the air filter element listed. See **Motorcraft Parts** (page 246).

On vehicles with an EcoBoost engine, when servicing the air cleaner it is important that no foreign material enters the air induction system. The engine and turbocharger are susceptible to damage from even small particles.

Change the air filter element at the correct interval. See **Normal Scheduled Maintenance** (page 399).

Note: *Failure to use the correct air filter element may result in severe engine damage. Your warranty may be void for any damage to the engine if the correct air filter element is not used.*

Vehicles with 1.0L EcoBoost and 1.6L EcoBoost Engine

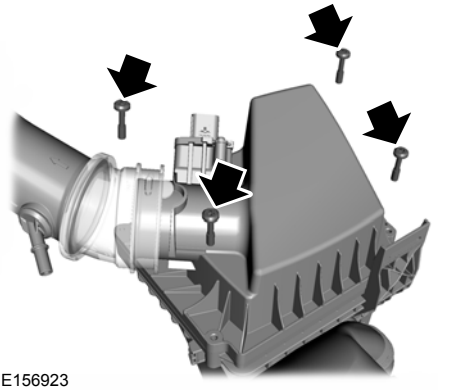

E156923

Vehicles with 1.6L Duratec-16V Engine

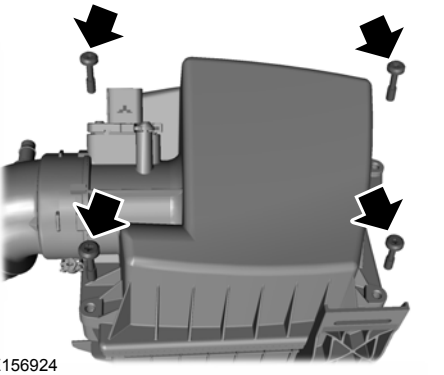

E156924

1. Remove the retaining screws that secure the air filter housing cover.
2. Carefully lift the air filter housing cover.
3. Remove the air filter element from the air filter housing.
4. Wipe any dirt or debris from the air filter housing and cover to make sure no dirt gets in the engine and to make sure you have a good seal.

2017 Fiesta (CCT) Canada/United States of America, HE8J 19A321 AB enUSA, Edition date: 201607, Second Printing

5. Install a new air filter element. Be careful not to crimp the filter element edges between the air filter housing and cover. This could cause filter damage and allow unfiltered air to enter the engine if not correctly seated.
6. Install the air filter housing cover.
7. Install the retaining screws to secure the air filter housing cover to the air filter housing.

DRIVE BELT ROUTING - 1.0L ECOBOOST™

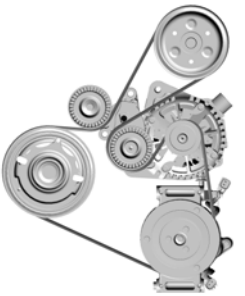

E163197

DRIVE BELT ROUTING - 1.6L DURATEC-16V TI-VCT (SIGMA)

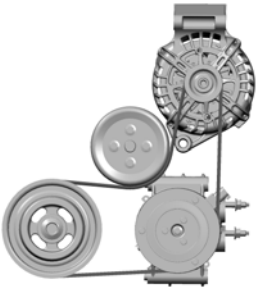

E163198

2017 Fiesta (CCT) Canada/United States of America, HE8J 19A321 AB enUSA, Edition date: 201607, Second Printing

CLEANING PRODUCTS

For best results, use the following products or products of equivalent quality:

Materials

Name	Specification
Motorcraft® Bug and Tar Remover *(U.S.)* Dissolvant de goudron et éliminateur d'insectes *(Canada)* ZC-42 *(U.S. & Canada)*	-
Motorcraft® Custom Bright Metal Cleaner *(U.S.)* Nettoyant pour métal brillant *(Canada)* ZC-15 *(U.S. & Canada)*	-
Motorcraft® Detail Wash *(U.S.)* Shampooing superfin *(Canada)* ZC-3-A *(U.S. & Canada)*	ESR-M14P4-A
Motorcraft® Engine Shampoo and Degreaser Engine Shampoo and Degreaser ZC-20 *(U.S.)*	-
Engine Shampoo Shampooing pour moteur *(Canada)* CXC-66-A *(Canada)*	-
Motorcraft® Leather and Vinyl Cleaner *(U.S.)* Nettoyant pour cuir et vinyle de haute qualité *(Canada)* ZC-56 *(U.S. & Canada)*	-
Multi-Purpose Cleaner Nettoyant multi-usage *(Canada)* CXC-101 *(Canada)*	-
Motorcraft® Premium Windshield Wash Concentrate with Bitterant *(U.S.)* Liquide lave-glace de haute qualité *(Canada)* ZC-32-B2 *(U.S.)* CXC-37-A/B/D/F *(Canada)*	WSS-M14P19-A
Professional Strength Carpet and Upholstery Cleaner *(U.S.)* Nettoyant professionnel pour sellerie et moquette *(Canada)* ZC-54 *(U.S. & Canada)*	-
Motorcraft® Spot and Stain Remover Spot and Stain Remover ZC-14 *(U.S.)*	-
Motorcraft® Ultra-Clear Spray Glass Cleaner *(U.S.)* Nettoie-vitres de qualité supérieure *(Canada)* ZC-23 *(U.S.)* CXC-100 *(Canada)*	ESR-M14P5-A
Motorcraft® Wheel and Tire Cleaner *(U.S.)* Nettoyant pour roues et pneus *(Canada)* ZC-37-A *(U.S. & Canada)*	-

2017 Fiesta (CCT) Canada/United States of America, HE8J 19A321 AB enUSA, Edition date: 201607, Second Printing

CLEANING THE EXTERIOR

Wash your vehicle regularly with cool or lukewarm water and a neutral pH shampoo, we recommend Motorcraft Detail Wash.

- Never use strong household detergents or soap, for example dish washing or laundry liquid. These products can discolor and spot painted surfaces.
- Never wash your vehicle when it is hot to the touch, or during strong or direct sunlight.
- Dry your vehicle with a chamois or soft terry cloth towel to eliminate water spotting.
- Immediately remove fuel spillages, bird droppings, insect deposits and road tar. These may cause damage to your vehicle's paintwork or trim over time. We recommend Motorcraft Bug and Tar Remover.
- Remove any exterior accessories, for example antennas, before entering a car wash.

Note: *Suntan lotions and insect repellents can damage painted surfaces. If these substances come in contact with your vehicle, wash the affected area as soon as possible.*

Cleaning the Headlamps

Note: *Do not scrape the headlamp lenses or use abrasives, alcoholic solvents or chemical solvents to clean them.*

Note: *Do not wipe the headlamps when they are dry.*

Exterior Chrome Parts

- Apply a high quality-cleaning product to bumpers and other chrome parts. Follow the manufacturer's instructions. We recommend Motorcraft Custom Bright Metal Cleaner.
- Do not apply the cleaning product to hot surfaces. Do not leave the cleaning product on chrome surfaces longer than the time recommended.
- Using other non-recommended cleaners can result in severe and permanent cosmetic damage.

Note: *Never use abrasive materials, for example steel wool or plastic pads as they can scratch the chrome surface.*

Note: *Do not use chrome cleaner, metal cleaner or polish on wheels or wheel covers.*

Exterior Plastic Parts

For routine cleaning we recommend Motorcraft Detail Wash. If tar or grease spots are present, we recommend Motorcraft Bug and Tar Remover.

Stripes or Graphics (If Equipped)

Hand washing your vehicle is preferred however, pressure washing may be used under the following conditions:

- Do not use water pressure higher than 2,000 psi (14,000 kPa).
- Do not use water hotter than 179°F (82°C).
- Use a spray with a 40° wide spray angle pattern.
- Keep the nozzle at a 12 in (305 mm) distance and 90° angle to your vehicle's surface.

Note: *Holding the pressure washer nozzle at an angle to the vehicle's surface may damage graphics and cause the edges to peel away from the vehicle's surface.*

2017 Fiesta (CCT) Canada/United States of America, HE8J 19A321 AB enUSA, Edition date: 201607, Second Printing

Underbody

Flush the complete underside of your vehicle frequently. Keep body and door drain holes free of debris or foreign material.

Under Hood

For removing black rubber marks from under the hood we recommend Motorcraft Wheel and Tire Cleaner or Motorcraft Bug and Tar Remover.

WAXING

Regular waxing is necessary to protect your car's paint from the elements. We recommend that you wash and wax the painted surface once or twice a year.

When washing and waxing, park your vehicle in a shaded area out of direct sunlight. Always wash your vehicle before applying wax.

- Use a quality wax that does not contain abrasives.
- Follow the manufacturer’s instructions to apply and remove the wax.
- Apply a small amount of wax in a back-and-forth motion, not in circles.
- Do not allow wax to come in contact with any non-body (low-gloss black) colored trim. The wax will discolor or stain the parts over time.
  - Roof racks.
  - Bumpers.
  - Grained door handles.
  - Side moldings.
  - Mirror housings.
  - Windshield cowl area.
- Do not apply wax to glass areas.
- After waxing, your car's paint should feel smooth, and be free of streaks and smudges.

CLEANING THE ENGINE

Engines are more efficient when they are clean because grease and dirt buildup keep the engine warmer than normal.

When washing:

- Take care when using a power washer to clean the engine. The high-pressure fluid could penetrate the sealed parts and cause damage.
- Do not spray a hot engine with cold water to avoid cracking the engine block or other engine components.
- Spray Motorcraft Engine Shampoo and Degreaser on all parts that require cleaning and pressure rinse clean. In Canada, use Motorcraft Engine Shampoo.
- Never wash or rinse the engine while it is hot or running; water in the running engine may cause internal damage.
- Never wash or rinse any ignition coil, spark plug wire or spark plug well, or the area in and around these locations.
- Cover the battery, power distribution box, and air filter assembly to prevent water damage when cleaning the engine.

CLEANING THE WINDOWS AND WIPER BLADES

Car wash chemicals and environmental fallout can result in windshield and wiper blade contamination. Dirty windshield and wipers will result in poor windshield wiper operation. Keep the windshield and wiper blades clean to maintain windshield wiper performance.

2017 Fiesta (CCT) Canada/United States of America, HE8J 19A321 AB enUSA, Edition date: 201607, Second Printing

To clean the windshield and wiper blades:

- Clean the windshield with a non-abrasive glass cleaner. When cleaning the interior of the windshield, avoid getting any glass cleaner on the instrument panel or door panels. Wipe any glass cleaner off these surfaces immediately.
- For windshields contaminated with tree sap, chemicals, wax or bugs, clean the entire windshield using steel wool (no greater than 0000 grade) in a circular motion and rinse with water.
- Clean the wiper blades with isopropyl rubbing alcohol or windshield washer concentrate.

Note: *Do not use razor blades or other sharp objects to clean or remove decals from the inside of the heated rear window. The vehicle warranty does not cover damage caused to the heated rear window grid lines.*

CLEANING THE INTERIOR

WARNINGS

Do not use cleaning solvents, bleach or dye on the vehicle's safety belts, as these actions may weaken the belt webbing.

On vehicles equipped with seat-mounted airbags, do not use chemical solvents or strong detergents. Such products could contaminate the side airbag system and affect performance of the side airbag in a collision.

For fabric, carpets, cloth seats, safety belts and seats equipped with side airbags:

- Remove dust and loose dirt with a vacuum cleaner.
- Remove light stains and soil with Motorcraft Professional Strength Carpet & Upholstery Cleaner.
- If grease or tar is present on the material, spot-clean the area first with Motorcraft Spot and Stain Remover. In Canada, use Motorcraft Multi-Purpose Cleaner.
- If a ring forms on the fabric after spot cleaning, clean the entire area immediately (but do not oversaturate) or the ring will set.
- Do not use household cleaning products or glass cleaners, which can stain and discolor the fabric and affect the flame retardant abilities of the seat materials.

CLEANING THE INSTRUMENT PANEL AND INSTRUMENT CLUSTER LENS

WARNING

Do not use chemical solvents or strong detergents when cleaning the steering wheel or instrument panel to avoid contamination of the airbag system.

Note: *Follow the same procedure as cleaning leather seats for cleaning leather instrument panels and leather interior trim surfaces. See* ***Cleaning Leather Seats*** *(page 215).*

Clean the instrument panel and cluster lens with a clean, damp and soft cloth, then use a clean, dry and soft cloth to dry these areas.

2017 Fiesta (CCT) Canada/United States of America, HE8J 19A321 AB enUSA, Edition date: 201607, Second Printing

- Avoid cleaners or polishes that increase the gloss of the upper portion of the instrument panel. The dull finish in this area helps protect you from undesirable windshield reflection.
- Do not use any household cleaning products or glass cleaners as these may damage the finish of the instrument panel, interior trim and cluster lens.
- Wash or wipe your hands clean if you have been in contact with certain products such as insect repellent and suntan lotion to avoid possible damage to the interior painted surfaces.
- Do not allow air fresheners and hand sanitizers to spill onto interior surfaces. If a spill occurs, wipe off immediately. Your warranty may not cover these damages.

If a staining liquid like coffee or juice has been spilled on the instrument panel or on interior trim surfaces:

1. Wipe up spilled liquid using a clean, soft cloth as quickly as possible.
2. Use Motorcraft Premium Leather and Vinyl Cleaner or a commercially available leather cleaning product for automotive interiors. Test any cleaner or stain remover on an inconspicuous area.
3. Alternatively, wipe the surface with a clean, soft cloth and a mild soap and water solution. Dry the area with a clean, soft cloth.
4. If necessary, apply more soap and water solution or cleaning product to a clean, soft cloth and press it onto the soiled area. Allow this to set at room temperature for 30 minutes.
5. Remove the soaked cloth, then with a clean, damp cloth, use a rubbing motion for 60 seconds on the soiled area.
6. Dry the area with a clean, soft cloth.

CLEANING LEATHER SEATS (If Equipped)

Note: *Follow the same procedure as cleaning leather seats for cleaning leather instrument panels and leather interior trim surfaces.*

For routine cleaning, wipe the surface with a soft, damp cloth and a mild soap and water solution. Dry the area with a clean, soft cloth.

For cleaning and removing stains such as dye transfer, use Motorcraft Premium Leather and Vinyl Cleaner or a commercially available leather cleaning product for automotive interiors.

Note: *Test any cleaner or stain remover on an inconspicuous area.*

You should:

- Remove dust and loose dirt with a vacuum cleaner.
- Clean and treat spills and stains as soon as possible.

Do not use the following products as these may damage the leather:

- Oil and petroleum or silicone-based leather conditioners.
- Household cleaners.
- Alcohol solutions.
- Solvents or cleaners intended specifically for rubber, vinyl and plastics.

2017 Fiesta (CCT) Canada/United States of America, HE8J 19A321 AB enUSA, Edition date: 201607, Second Printing

REPAIRING MINOR PAINT DAMAGE

You should repair paintwork damage caused by stones from the road or minor scratches as soon as possible. A choice of products are available from an authorized dealer.

Remove particles such as bird droppings, tree sap, insect deposits, tar spots, road salt and industrial fallout before repairing paint chips.

Always read and follow the manufacturer's instructions before using the products.

CLEANING THE WHEELS

Note: *Do not apply a cleaning chemical to warm or hot wheel rims and covers.*

Note: *Industrial-strength (heavy-duty) cleaners, or cleaning chemicals, in combination with brush agitation to remove brake dust and dirt, could wear away the clear coat finish over a period of time.*

Note: *Do not use hydrofluoric acid-based or high caustic-based wheel cleaners, steel wool, fuels or strong household detergent.*

Note: *If you intend parking your vehicle for an extended period after cleaning the wheels with a wheel cleaner, drive your vehicle for a few minutes before doing so. This will reduce the risk of increased corrosion of the brake discs, brake pads and linings.*

Note: *Some automatic car washes may cause damage to the finish on your wheel rims and covers.*

Alloy wheels and wheel covers are coated with a clear coat paint finish. To maintain their condition we recommend that you:

- Clean them weekly with the recommended wheel and tire cleaner.
- Use a sponge to remove heavy deposits of dirt and brake dust accumulation.
- Rinse them thoroughly with a pressurized stream of water when you have completed the cleaning process.

We recommend that you use Ford service wheel cleaner. Make sure that you read and follow the manufacturer's instructions.

Using other non-recommended cleaning products can result in severe and permanent cosmetic damage.

VEHICLE STORAGE

If you plan on storing your vehicle for 30 days or more, read the following maintenance recommendations to make sure your vehicle stays in good operating condition.

We engineer and test all motor vehicles and their components for reliable, regular driving. Under various conditions, long-term storage may lead to degraded engine performance or failure unless you use specific precautions to preserve engine components.

General

- Store all vehicles in a dry, ventilated place.
- Protect from sunlight, if possible.
- If vehicles are stored outside, they require regular maintenance to protect against rust and damage.

2017 Fiesta (CCT) Canada/United States of America, HE8J 19A321 AB enUSA, Edition date: 201607, Second Printing

Body

- Wash your vehicle thoroughly to remove dirt, grease, oil, tar or mud from exterior surfaces, rear-wheel housing and the underside of front fenders.
- Periodically wash your vehicle if it is stored in exposed locations.
- Touch-up exposed or primed metal to prevent rust.
- Cover chrome and stainless steel parts with a thick coat of auto wax to prevent discoloration. Re-wax as necessary when you wash your vehicle.
- Lubricate all hood, door and luggage compartment hinges and latches with a light grade oil.
- Cover interior trim to prevent fading.
- Keep all rubber parts free from oil and solvents.

Engine

- Change the engine oil and filter prior to storage because used engine oil contains contaminates which may cause engine damage.
- Start the engine every 15 days for a minimum of 15 minutes. Run at fast idle with the climate controls set to defrost until the engine reaches normal operating temperature.
- With your foot on the brake, shift through all the gears while the engine is running.
- We recommend that you change the engine oil before you use your vehicle again.

Fuel system

- Fill the fuel tank with high-quality fuel until the first automatic shutoff of the fuel pump nozzle.

Cooling system

- Protect against freezing temperatures.
- When removing your vehicle from storage, check coolant fluid level. Confirm that there are no cooling system leaks and that fluid is at the recommended level.

Battery

- Check and recharge as necessary. Keep connections clean.
- If storing your vehicle for more than 30 days without recharging the battery, we recommend that you disconnect the battery cables to maintain battery charge for quick starting.

Note: *It is necessary to reset memory features if battery cables are disconnected.*

Brakes

- Make sure the brakes and parking brake release fully.

Tires

- Maintain recommended air pressure.

Miscellaneous

- Make sure all linkages, cables, levers and pins under your vehicle are covered with grease to prevent rust.
- Move vehicles at least 25 ft (7.5 m) every 15 days to lubricate working parts and prevent corrosion.

Removing Vehicle From Storage

When your vehicle is ready to come out of storage, do the following:

- Wash your vehicle to remove any dirt or grease film build-up on window surfaces.
- Check windshield wipers for any deterioration.

2017 Fiesta (CCT) Canada/United States of America, HE8J 19A321 AB enUSA, Edition date: 201607, Second Printing

- Check under the hood for any foreign material that may have collected during storage such as mice or squirrel nests.
- Check the exhaust for any foreign material that may have collected during storage.
- Check tire pressures and set tire inflation per the Tire Label.
- Check brake pedal operation. Drive your vehicle 15 ft (4.5 m) back and forth to remove rust build-up.
- Check fluid levels (including coolant, oil and gas) to make sure there are no leaks, and fluids are at recommended levels.
- If you remove the battery, clean the battery cable ends and check for damage.

Contact an authorized dealer if you have any concerns or issues.

2017 Fiesta (CCT) Canada/United States of America, HE8J 19A321 AB enUSA, Edition date: 201607, Second Printing

GENERAL INFORMATION

A decal with tire pressure data is located in the driver's door opening.

Check and set the tire pressure at the ambient temperature in which you are intending to drive your vehicle and when the tires are cold.

Note: *Check your tire pressures regularly to optimize fuel economy.*

Note: *Use only approved wheel and tire sizes. Using other sizes could damage your vehicle and will make the National Type Approval invalid.*

Note: *If you change the diameter of the tires from that fitted at the factory, the speedometer may not display the correct speed. Take your vehicle to an authorized dealer to have the engine management system reprogrammed.*

TIRE CARE

Important information for 205/40R17 low-profile tires and wheels

If your vehicle is equipped with 205/40R17 tires, they are low-profile tires. These tires and wheels are designed to give your vehicle a sport appearance. With low-profile tires, you may notice an increase in road noise and faster tire wear, depending on road conditions and driving styles. Due to their design, low-profile tires and wheels are more prone to road damage from potholes, rough or unpaved roads, car wash rails and curb contact than standard tires and wheels.

Note: *Your vehicle's warranty does not cover these types of damage. Tires should always be kept at the correct inflation pressures and extra caution should be taken when operating on rough roads to avoid impacts that could cause wheel and tire damage.*

Information About Uniform Tire Quality Grading

E142542

Tire Quality Grades apply to new pneumatic passenger car tires. The Quality grades can be found where applicable on the tire sidewall between tread shoulder and maximum section width. For example: **Treadwear 200 Traction AA Temperature A**.

These Tire Quality Grades are determined by standards that the United States Department of Transportation has set.

2017 Fiesta (CCT) Canada/United States of America, HE8J 19A321 AB enUSA, Edition date: 201607, Second Printing

Tire Quality Grades apply to new pneumatic passenger car tires. They do not apply to deep tread, winter-type snow tires, space-saver or temporary use spare tires, light truck or LT type tires, tires with nominal rim diameters of 10 to 12 inches or limited production tires as defined in Title 49 Code of Federal Regulations Part 575.104 (c)(2).

U.S. Department of Transportation Tire quality grades: The U.S. Department of Transportation requires Ford Motor Company to give you the following information about tire grades exactly as the government has written it.

Treadwear

The treadwear grade is a comparative rating based on the wear rate of the tire when tested under controlled conditions on a specified government test course. For example, a tire graded 150 would wear one and one-half (1 ½) times as well on the government course as a tire graded 100. The relative performance of tires depends upon the actual conditions of their use, however, and may depart significantly from the norm due to variations in driving habits, service practices, and differences in road characteristics and climate.

Traction AA A B C

WARNING

The traction grade assigned to this tire is based on straight-ahead braking traction tests, and does not include acceleration, cornering, hydroplaning or peak traction characteristics.

The traction grades, from highest to lowest are AA, A, B, and C. The grades represent the tire's ability to stop on wet pavement as measured under controlled conditions on specified government test surfaces of asphalt and concrete. A tire marked C may have poor traction performance.

Temperature A B C

WARNING

The temperature grade for this tire is established for a tire that is properly inflated and not overloaded. Excessive speed, underinflation, or excessive loading, either separately or in combination, can cause heat buildup and possible tire failure.

The temperature grades are A (the highest), B and C, representing the tire's resistance to the generation of heat and its ability to dissipate heat when tested under controlled conditions on a specified indoor laboratory

2017 Fiesta (CCT) Canada/United States of America, HE8J 19A321 AB enUSA, Edition date: 201607, Second Printing

test wheel. Sustained high temperature can cause the material of the tire to degenerate and reduce tire life, and excessive temperature can lead to sudden tire failure. The grade C corresponds to a level of performance which all passenger car tires must meet under the Federal Motor Vehicle Safety Standard No. 139. Grades B and A represent higher levels of performance on the laboratory test wheel than the minimum required by law.

Glossary of Tire Terminology

* **Tire label:** A label showing the OE (Original Equipment) tire sizes, recommended inflation pressure and the maximum weight the vehicle can carry.

***Tire Identification Number (TIN):** A number on the sidewall of each tire providing information about the tire brand and manufacturing plant, tire size and date of manufacture. Also referred to as DOT code.

***Inflation pressure:** A measure of the amount of air in a tire.

***Standard load:** A class of P-metric or Metric tires designed to carry a maximum load at set pressure. For example: for P-metric tires 35 psi (2.4 bar) and for Metric tires 36 psi (2.5 bar). Increasing the inflation pressure beyond this pressure will not increase the tire capability.

***Extra load:** A class of P-metric or Metric tires designed to carry a heavier maximum load at 42 psi (2.9 bar). Increasing the inflation pressure beyond this pressure will not increase the tire's load carrying capability.

***kPa:** Kilopascal, a metric unit of air pressure.

***PSI:** Pounds per square inch, a standard unit of air pressure.

***Cold tire pressure:** The tire pressure when the vehicle has been stationary and out of direct sunlight for an hour or more and prior to the vehicle being driven for 1 mile (1.6 kilometers).

***Recommended inflation pressure:** The cold inflation pressure found on the Safety Compliance Certification Label (affixed to either the door hinge pillar, door-latch post, or the door edge that meets the door-latch post, next to the driver's seating position), or Tire Label located on the B-Pillar or the edge of the driver's door.

***B-pillar:** The structural member at the side of the vehicle behind the front door

* **Bead area of the tire:** Area of the tire next to the rim.

* **Sidewall of the tire:** Area between the bead area and the tread.

2017 Fiesta (CCT) Canada/United States of America, HE8J 19A321 AB enUSA, Edition date: 201607, Second Printing

* **Tread area of the tire:** Area of the perimeter of the tire that contacts the road when mounted on the vehicle.

***Rim:** The metal support (wheel) for a tire or a tire and tube assembly upon which the tire beads are seated.

Information Contained on the Tire Sidewall

Both U.S. and Canada Federal regulations require tire manufacturers to place standardized information on the sidewall of all tires. This information identifies and describes the fundamental characteristics of the tire and also provides a U.S. DOT Tire Identification Number for safety standard certification and in case of a recall.

Information on P Type Tires

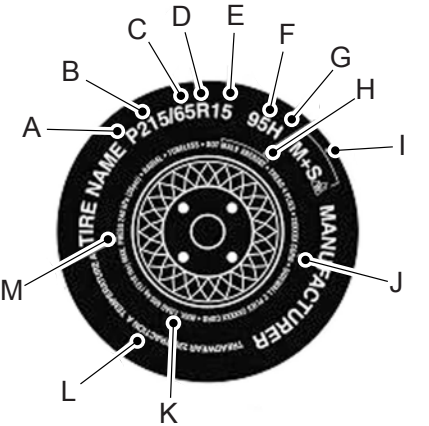

E142543

P215/65R15 95H is an example of a tire size, load index and speed rating. The definitions of these items are listed below. (Note that the tire size, load index and speed rating for your vehicle may be different from this example.)

A. **P:** Indicates a tire, designated by the Tire and Rim Association (T&RA), that may be used for service on cars, SUVs, minivans and light trucks. **Note:** If your tire size does not begin with a letter this may mean it is designated by either ETRTO (European Tire and Rim Technical Organization) or JATMA (Japan Tire Manufacturing Association).

2017 Fiesta (CCT) Canada/United States of America, HE8J 19A321 AB enUSA, Edition date: 201607, Second Printing

B. **215:** Indicates the nominal width of the tire in millimeters from sidewall edge to sidewall edge. In general, the larger the number, the wider the tire.

C. **65:** Indicates the aspect ratio which gives the tire's ratio of height to width.

D. **R:** Indicates a radial type tire.

E. **15:** Indicates the wheel or rim diameter in inches. If you change your wheel size, you will have to purchase new tires to match the new wheel diameter.

F. **95:** Indicates the tire's load index. It is an index that relates to how much weight a tire can carry. You may find this information in your owner's manual. If not, contact a local tire dealer.

Note: *You may not find this information on all tires because it is not required by federal law.*

G. **H:** Indicates the tire's speed rating. The speed rating denotes the speed at which a tire is designed to be driven for extended periods of time under a standard condition of load and inflation pressure. The tires on your vehicle may operate at different conditions for load and inflation pressure. These speed ratings may need to be adjusted for the difference in conditions. The ratings range from 81 mph (130 km/h) to 186 mph (299 km/h). These ratings are listed in the following chart.

Note: *You may not find this information on all tires because it is not required by federal law.*

Letter rating	Speed rating - mph (km/h)
M	81 mph (130 km/h)
N	87 mph (140 km/h)
Q	99 mph (159 km/h)
R	106 mph (171 km/h)
S	112 mph (180 km/h)
T	118 mph (190 km/h)
U	124 mph (200 km/h)
H	130 mph (210 km/h)
V	149 mph (240 km/h)
W	168 mph (270 km/h)
Y	186 mph (299 km/h)

Note: *For tires with a maximum speed capability over 149 mph (240 km/h), tire manufacturers sometimes use the letters ZR. For those with a maximum speed capability over 186 mph (299 km/h), tire manufacturers always use the letters ZR.*

H. **U.S. DOT Tire Identification Number (TIN):** This begins with the letters DOT and indicates that the tire meets all federal standards. The next two numbers or letters are the plant code designating where it was manufactured, the next two are

2017 Fiesta (CCT) Canada/United States of America, HE8J 19A321 AB enUSA, Edition date: 201607, Second Printing

the tire size code and the last four numbers represent the week and year the tire was built. For example, the numbers 317 mean the 31st week of 1997. After 2000 the numbers go to four digits. For example, 2501 means the 25th week of 2001. The numbers in between are identification codes used for traceability. This information is used to contact customers if a tire defect requires a recall.

I. **M+S or M/S:** Mud and Snow, or

AT: All Terrain, or

AS: All Season.

J. **Tire Ply Composition and Material Used:** Indicates the number of plies or the number of layers of rubber-coated fabric in the tire tread and sidewall. Tire manufacturers also must indicate the ply materials in the tire and the sidewall, which include steel, nylon, polyester, and others.

K. **Maximum Load:** Indicates the maximum load in kilograms and pounds that can be carried by the tire. Refer to the Safety Compliance Certification Label (affixed to either the door hinge pillar, door-latch post, or the door edge that meets the door-latch post, next to the driver's seating position), for the correct tire pressure for your vehicle.

L. **Treadwear, Traction and Temperature Grades:**

***Treadwear** The treadwear grade is a comparative rating based on the wear rate of the tire when tested under controlled conditions on a specified government test course. For example, a tire graded 150 would wear one and one-half times as well on the government course as a tire graded 100.

***Traction:** The traction grades, from highest to lowest are AA, A, B, and C. The grades represent the tire's ability to stop on wet pavement as measured under controlled conditions on specified government test surfaces of asphalt and concrete. A tire marked C may have poor traction performance.

***Temperature:** The temperature grades are A (the highest), B and C, representing the tire's resistance to the generation of heat and its ability to dissipate heat when tested under controlled conditions on a specified indoor laboratory test wheel.

M. **Maximum Inflation Pressure:** Indicates the tire manufacturers' maximum permissible pressure or the pressure at which the maximum load can be carried by the tire. This pressure is normally higher than the vehicle manufacturer's recommended cold inflation pressure which can be found on the Safety Compliance Certification Label (affixed to either the door hinge pillar, door-latch post, or the door edge

2017 Fiesta (CCT) Canada/United States of America, HE8J 19A321 AB enUSA, Edition date: 201607, Second Printing

that meets the door-latch post, next to the driver's seating position), or Tire Label which is located on the B-Pillar or the edge of the driver's door. The cold inflation pressure should never be set lower than the recommended pressure on the vehicle label.

The tire suppliers may have additional markings, notes or warnings such as standard load, radial tubeless, etc.

Additional Information Contained on the Tire Sidewall for LT Type Tires

Note: *Tire Quality Grades do not apply to this type of tire.*

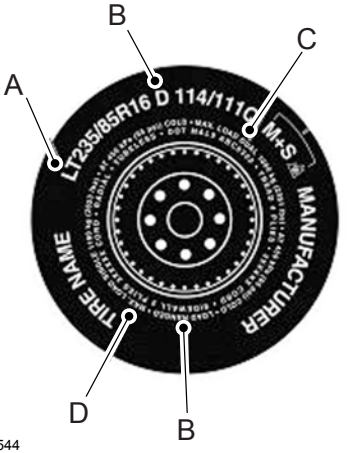

E142544

LT type tires have some additional information beyond those of P type tires; these differences are described below.

A. **LT:** Indicates a tire, designated by the Tire and Rim Association (T&RA), that is intended for service on light trucks.

B. **Load Range and Load Inflation Limits:** Indicates the tire's load-carrying capabilities and its inflation limits.

C. **Maximum Load Dual lb (kg) at psi (kPa) cold:** Indicates the maximum load and tire pressure when the tire is used as a dual; defined as four tires on the rear axle (a total of six or more tires on the vehicle).

D. **Maximum Load Single lb (kg) at psi (kPa) cold:** Indicates the maximum load and tire pressure when the tire is used as a single; defined as two tires (total) on the rear axle.

Information on T Type Tires

T145/80D16 is an example of a tire size.

Note: *The temporary tire size for your vehicle may be different from this example. Tire Quality Grades do not apply to this type of tire.*

2017 Fiesta (CCT) Canada/United States of America, HE8J 19A321 AB enUSA, Edition date: 201607, Second Printing

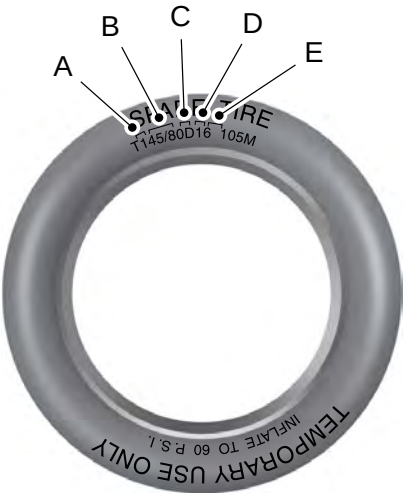

E142545

T type tires have some additional information beyond those of P type tires; these differences are described below:

A. **T:** Indicates a type of tire, designated by the Tire and Rim Association (T&RA), that is intended for temporary service on cars, SUVs, minivans and light trucks.

B. **145:** Indicates the nominal width of the tire in millimeters from sidewall edge to sidewall edge. In general, the larger the number, the wider the tire.

C. **80:** Indicates the aspect ratio which gives the tire's ratio of height to width. Numbers of 70 or lower indicate a short sidewall.

D. **D:** Indicates a diagonal type tire.

R: Indicates a radial type tire.

E. **16:** Indicates the wheel or rim diameter in inches. If you change your wheel size, you will have to purchase new tires to match the new wheel diameter.

Location of the Tire Label

You will find a Tire Label containing tire inflation pressure by tire size and other important information located on the B-Pillar or the edge of the driver's door.

Inflating Your Tires

Safe operation of your vehicle requires that your tires are properly inflated. Remember that a tire can lose up to half of its air pressure without appearing flat.

Every day before you drive, check your tires. If one looks lower than the others, use a tire gauge to check pressure of all tires and adjust if required.

At least once a month and before long trips, inspect each tire and check the tire pressure with a tire gauge (including spare, if equipped). Inflate all tires to the inflation pressure recommended by Ford Motor Company.

2017 Fiesta (CCT) Canada/United States of America, HE8J 19A321 AB enUSA, Edition date: 201607, Second Printing

You are strongly urged to buy a reliable tire pressure gauge, as automatic service station gauges may be inaccurate. Ford recommends the use of a digital or dial-type tire pressure gauge rather than a stick-type tire pressure gauge.

Use the recommended cold inflation pressure for optimum tire performance and wear. Under-inflation or over-inflation may cause uneven treadwear patterns

WARNING

Under-inflation is the most common cause of tire failures and may result in severe tire cracking, tread separation or blowout, with unexpected loss of vehicle control and increased risk of injury. Under-inflation increases sidewall flexing and rolling resistance, resulting in heat buildup and internal damage to the tire. It also may result in unnecessary tire stress, irregular wear, loss of vehicle control and accidents. A tire can lose up to half of its air pressure and not appear to be flat!

Always inflate your tires to the Ford recommended inflation pressure even if it is less than the maximum inflation pressure information found on the tire. The Ford recommended tire inflation pressure is found on the Safety Compliance Certification Label (affixed to either the door hinge pillar, door-latch post, or the door edge that meets the door-latch post, next to the driver's seating position), or Tire Label which is located on the B-Pillar or the edge of the driver’s door. Failure to follow the tire pressure recommendations can cause uneven treadwear patterns and adversely affect the way your vehicle handles

Maximum Inflation Pressure is the tire manufacturer's maximum permissible pressure and the pressure at which the maximum load can be carried by the tire. This pressure is normally higher than the manufacturer’s recommended cold inflation pressure which can be found on the Safety Compliance Certification Label (affixed to either the door hinge pillar, door-latch post, or the door edge that meets the door-latch post, next to the driver's seating position), or Tire Label which is located on the B-Pillar or the edge of the driver’s door. The cold inflation pressure should never be set lower than the recommended pressure on the Safety Compliance Certification Label or Tire Label.

2017 Fiesta (CCT) Canada/United States of America, HE8J 19A321 AB enUSA, Edition date: 201607, Second Printing

When weather temperature changes occur, tire inflation pressures also change. A 10ºF (6ºC) temperature drop can cause a corresponding drop of 1 psi (7 kPa) in inflation pressure. Check your tire pressures frequently and adjust them to the proper pressure which can be found on the Safety Compliance Certification Label or Tire Label.

To check the pressure in your tire(s):

1. Make sure the tires are cool, meaning they are not hot from driving even a mile.

Note: *If you are checking tire pressure when the tire is hot, (i.e. driven more than 1 mile [1.6 km]), never bleed or reduce air pressure. The tires are hot from driving and it is normal for pressures to increase above recommended cold pressures. A hot tire at or below recommended cold inflation pressure could be significantly under-inflated.*

Note: *If you have to drive a distance to get air for your tire(s), check and record the tire pressure first and add the appropriate air pressure when you get to the pump. It is normal for tires to heat up and the air pressure inside to go up as you drive.*

2. Remove the cap from the valve on one tire, then firmly press the tire gauge onto the valve and measure the pressure.

3. Add enough air to reach the recommended air pressure.

Note: *If you overfill the tire, release air by pressing on the metal stem in the center of the valve. Then recheck the pressure with your tire gauge.*

4. Replace the valve cap.

5. Repeat this procedure for each tire, including the spare.

Note: *Some spare tires operate at a higher inflation pressure than the other tires. For T type mini-spare tires (refer to the Dissimilar spare wheel and tire assembly information for a description): Store and maintain at 60 psi (4.15 bar). For full-size and dissimilar spare tires (refer to the Dissimilar spare wheel and tire assembly information for a description): Store and maintain at the higher of the front and rear inflation pressure as shown on the Tire Label.*

6. Visually inspect the tires to make sure there are no nails or other objects embedded that could poke a hole in the tire and cause an air leak.

7. Check the sidewalls to make sure there are no gouges, cuts or bulges.

2017 Fiesta (CCT) Canada/United States of America, HE8J 19A321 AB enUSA, Edition date: 201607, Second Printing

Inspecting Your Tires and Wheel Valve Stems

Periodically inspect the tire treads for uneven or excessive wear and remove objects such as stones, nails or glass that may be wedged in the tread grooves. Check the tire and valve stems for holes, cracks, or cuts that may permit air leakage and repair or replace the tire and replace the valve stem. Inspect the tire sidewalls for cracking, cuts, bruises and other signs of damage or excessive wear. If internal damage to the tire is suspected, have the tire demounted and inspected in case it needs to be repaired or replaced. For your safety, tires that are damaged or show signs of excessive wear should not be used because they are more likely to blow out or fail.

Improper or inadequate vehicle maintenance can cause tires to wear abnormally. Inspect all your tires, including the spare, frequently, and replace them if one or more of the following conditions exist:

Tire Wear

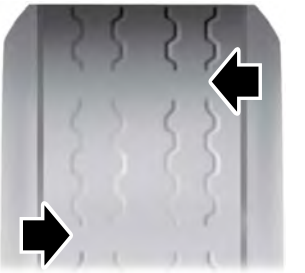

E142546

When the tread is worn down to one sixteenth of an inch (2 mm), tires must be replaced to help prevent your vehicle from skidding and hydroplaning. Built-in treadwear indicators, or wear bars, which look like narrow strips of smooth rubber across the tread will appear on the tire when the tread is worn down to one sixteenth of an inch (2 mm)

When the tire tread wears down to the same height as these wear bars, the tire is worn out and must be replaced.

Damage

Periodically inspect the tire treads and sidewalls for damage (such as bulges in the tread or sidewalls, cracks in the tread groove and separation in the tread or sidewall). If damage is observed

2017 Fiesta (CCT) Canada/United States of America, HE8J 19A321 AB enUSA, Edition date: 201607, Second Printing

or suspected have the tire inspected by a tire professional. Tires can be damaged during off-road use, so inspection after off-road use is also recommended.

Age

WARNINGS

Tires degrade over time depending on many factors such as weather, storage conditions, and conditions of use (load, speed, inflation pressure) the tires experience throughout their lives.

In general, tires should be replaced after six years regardless of tread wear. However, heat caused by hot climates or frequent high loading conditions can accelerate the aging process and may require tires to be replaced more frequently.

You should replace your spare tire when you replace the road tires or after six years due to aging even if it has not been used.

U.S. DOT Tire Identification Number (TIN)

Both U.S. and Canada Federal regulations require tire manufacturers to place standardized information on the sidewall of all tires. This information identifies and describes the fundamental characteristics of the tire and also provides a U.S. DOT Tire Identification Number for safety standard certification and in case of a recall.

This begins with the letters DOT and indicates that the tire meets all federal standards. The next two numbers or letters are the plant code designating where it was manufactured, the next two are the tire size code and the last four numbers represent the week and year the tire was built. For example, the numbers 317 mean the 31st week of 1997. After 2000 the numbers go to four digits. For example, 2501 means the 25th week of 2001. The numbers in between are identification codes used for traceability. This information is used to contact customers if a tire defect requires a recall.

Tire Replacement Requirements

Your vehicle is equipped with tires designed to provide a safe ride and handling capability.

2017 Fiesta (CCT) Canada/United States of America, HE8J 19A321 AB enUSA, Edition date: 201607, Second Printing

WARNING

Only use replacement tires and wheels that are the same size, load index, speed rating and type (such as P-metric versus LT-metric or all-season versus all-terrain) as those originally provided by Ford. The recommended tire and wheel size may be found on either the Safety Compliance Certification Label (affixed to either the door hinge pillar, door-latch post, or the door edge that meets the door-latch post, next to the driver's seating position), or the Tire Label which is located on the B-Pillar or edge of the driver's door. If this information is not found on these labels, then you should contact your authorized dealer as soon as possible. Use of any tire or wheel not recommended by Ford can affect the safety and performance of your vehicle, which could result in an increased risk of loss of vehicle control, vehicle rollover, personal injury and death.

WARNINGS

To reduce the risk of serious injury, when mounting replacement tires and wheels, you should not exceed the maximum pressure indicated on the sidewall of the tire to set the beads without additional precautions listed below. If the beads do not seat at the maximum pressure indicated, re-lubricate and try again.

WARNINGS

For a mounting pressure more than 20 psi (1.38 bar) greater than the maximum pressure, a Ford dealer or other tire service professional should do the mounting.

When inflating the tire for mounting pressures up to 20 psi (1.38 bar) greater than the maximum pressure on the tire sidewall, the following precautions must be taken to protect the person mounting the tire:

1. Make sure that you have the correct tire and wheel size.
2. Lubricate the tire bead and wheel bead seat area again.
3. Stand at a minimum of 12 ft (3.66 m) away from the wheel and tire assembly.
4. Use both eye and ear protection.

WARNING

Always inflate steel carcass tires with a remote air fill with the person inflating standing at a minimum of 12 ft (3.66 m) away from the wheel and tire assembly.

Important: Remember to replace the wheel valve stems when the road tires are replaced on your vehicle

2017 Fiesta (CCT) Canada/United States of America, HE8J 19A321 AB enUSA, Edition date: 201607, Second Printing

It is recommended that the two front tires or two rear tires generally be replaced as a pair.

The tire pressure sensors mounted in the wheels (originally installed on your vehicle) are not designed to be used in aftermarket wheels.

The use of wheels or tires not recommended by Ford Motor Company may affect the operation of your tire pressure monitoring system.

If the TPMS indicator is flashing, your TPMS is malfunctioning. Your replacement tire might be incompatible with your TPMS, or some component of the TPMS may be damaged.

Safety Practices

WARNINGS

If your vehicle is stuck in snow, mud or sand, do not rapidly spin the tires; spinning the tires can tear the tire and cause an explosion. A tire can explode in as little as three to five seconds.

Do not spin the wheels at over 34 mph (55 km/h). The tires may fail and injure a passenger or bystander.

Driving habits have a great deal to do with your tire mileage and safety.

*Observe posted speed limits

*Avoid fast starts, stops and turns

*Avoid potholes and objects on the road

*Do not run over curbs or hit the tire against a curb when parking

Highway Hazards

No matter how carefully you drive there's always the possibility that you may eventually have a flat tire on the highway. Drive slowly to the closest safe area out of traffic. This may further damage the flat tire, but your safety is more important.

If you feel a sudden vibration or ride disturbance while driving, or you suspect your tire or vehicle has been damaged, immediately reduce your speed. Drive with caution until you can safely pull off the road. Stop and inspect the tires for damage. If a tire is under-inflated or damaged, deflate it, remove wheel and replace it with your spare tire and wheel. If you cannot detect a cause, have the vehicle towed to the nearest repair facility or tire dealer to have the vehicle inspected.

2017 Fiesta (CCT) Canada/United States of America, HE8J 19A321 AB enUSA, Edition date: 201607, Second Printing

Tire and Wheel Alignment

A bad jolt from hitting a curb or pothole can cause the front end of your vehicle to become misaligned or cause damage to your tires. If your vehicle seems to pull to one side when you're driving, the wheels may be out of alignment. Have an authorized dealer check the wheel alignment periodically.

Wheel misalignment in the front or the rear can cause uneven and rapid treadwear of your tires and should be corrected by an authorized dealer. Front-wheel drive vehicles and those with an independent rear suspension (if equipped) may require alignment of all four wheels.

The tires should also be balanced periodically. An unbalanced tire and wheel assembly may result in irregular tire wear.

Tire Rotation

Note: *If your tires show uneven wear ask an authorized dealer to check for and correct any wheel misalignment, tire imbalance or mechanical problem involved before tire rotation.*

Note: *Your vehicle may be equipped with a dissimilar spare wheel and tire assembly. A dissimilar spare wheel and tire assembly is defined as a spare wheel and tire assembly that is different in brand, size or appearance from the road tires and wheels. If you have a dissimilar spare wheel and tire assembly it is intended for temporary use only and should not be used in a tire rotation.*

Note: *After having your tires rotated, inflation pressure must be checked and adjusted to the vehicle requirements.*

Rotating your tires at the recommended interval (as indicated in the Scheduled Maintenance chapter) will help your tires wear more evenly, providing better tire performance and longer tire life.

Front-wheel drive vehicles (front tires on the left side of the diagram)

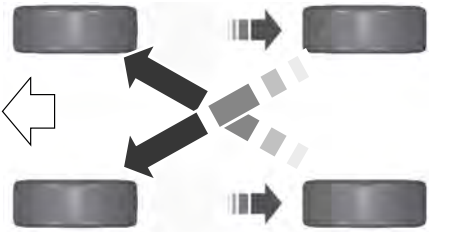

E142547

2017 Fiesta (CCT) Canada/United States of America, HE8J 19A321 AB enUSA, Edition date: 201607, Second Printing

Sometimes irregular tire wear can be corrected by rotating the tires.

USING SUMMER TIRES

Summer tires provide superior performance on wet and dry roads. Summer tires do not have the Mud and Snow (M+S or M/S) tire traction rating on the tire side wall. Since summer tires do not have the same traction performance as All-season or Snow tires, we do not recommend using summer tires when temperatures drop to about 45ºF (7ºC) or below (depending on tire wear and environmental conditions) or in snow and ice conditions. Like any tire, summer tire performance is affected by tire wear and environmental conditions. If you must drive in those conditions, we recommend using Mud and Snow (M+S, M/S), All-season or Snow tires.

Always store your summer tires indoors at temperatures above 19ºF (-7ºC). The rubber compounds used in these tires lose flexibility and may develop surface cracks in the tread area at temperatures below 19ºF (-7ºC). If the tires have been subjected to 19ºF (-7ºC) or less, warm them in a heated space to at least 41ºF (5ºC) for at least 24 hours before installing them on a vehicle, or moving the vehicle with the tires installed, or checking tire inflation. Do not place tires near heaters or heating devices used to warm the room where the tires are stored. Do not apply heat or blow heated air directly on the tires. Always inspect the tires after storage periods and before use.

USING WINTER TIRES

WARNING

When you use winter tires on your vehicle, you must make sure that you use the correct lug nuts.

If winter tires are used, you must make sure that you use the correct tire pressures.

USING SNOW CHAINS

WARNING

Your vehicle is not approved for use with snow chains.

TIRE PRESSURE MONITORING SYSTEM

WARNING

The tire pressure monitoring system is not a substitute for manually checking tire pressures. You should periodically check tire pressures using a pressure gauge. Failure to correctly maintain tire pressures could increase the risk of tire failure, loss of control, vehicle rollover and personal injury.

Each tire, including the spare (if provided), should be checked monthly when cold and inflated to the inflation pressure recommended by the vehicle manufacturer on the vehicle placard or tire inflation pressure label. (If your vehicle has tires of a different size than the size indicated on the vehicle placard or tire inflation pressure label, you should determine the proper tire inflation pressure for those tires.)

2017 Fiesta (CCT) Canada/United States of America, HE8J 19A321 AB enUSA, Edition date: 201607, Second Printing

As an added safety feature, your vehicle has been equipped with a Tire Pressure Monitoring System (TPMS) that illuminates a low tire pressure telltale when one or more of your tires is significantly under-inflated. Accordingly, when the low tire pressure telltale illuminates, you should stop and check your tires as soon as possible, and inflate them to the proper pressure. Driving on a significantly under-inflated tire causes the tire to overheat and can lead to tire failure. Under-inflation also reduces fuel efficiency and tire tread life, and may affect the vehicle's handling and stopping ability.

Please note that the TPMS is not a substitute for proper tire maintenance, and it is the driver's responsibility to maintain correct tire pressure, even if under-inflation has not reached the level to trigger illumination of the TPMS low tire pressure telltale.

Your vehicle has also been equipped with a TPMS malfunction indicator to indicate when the system is not operating properly. The TPMS malfunction indicator is combined with the low tire pressure telltale. When the system detects a malfunction, the telltale will flash for approximately one minute and then remain continuously illuminated. This sequence will continue upon subsequent vehicle start-ups as long as the malfunction exists.

When the malfunction indicator is illuminated, the system may not be able to detect or signal low tire pressure as intended. TPMS malfunctions may occur for a variety of reasons, including the installation of replacement or alternate tires or wheels on the vehicle that prevent the TPMS from functioning properly. Always check the TPMS malfunction telltale after replacing one or more tires or wheels on your vehicle to ensure that the replacement or alternate tires and wheels allow the TPMS to continue to function properly.

This device complies with Part 15 of the FCC Rules and with Industry Canada license-exempt RSS standard(s). Operation is subject to the following two conditions:

- This device may not cause harmful interference.
- This device must accept any interference received, including interference that may cause undesired operation.

Changing Tires With a Tire Pressure Monitoring System

E142549

Note: *Each road tire is equipped with a tire pressure sensor located inside the wheel and tire assembly cavity. The pressure sensor is attached to the valve stem. The pressure sensor is covered by the tire and is not visible unless the tire is removed. Take care when changing the tire to avoid damaging the sensor*

You should always have your tires serviced by an authorized dealer.

Check the tire pressure periodically (at least monthly) using an accurate tire gauge. See Inflating Your Tires in this chapter.

2017 Fiesta (CCT) Canada/United States of America, HE8J 19A321 AB enUSA, Edition date: 201607, Second Printing

Understanding Your Tire Pressure Monitoring System

The tire pressure monitoring system measures pressure in your four road tires and sends the tire pressure readings to your vehicle. The low tire pressure warning light will turn on if the tire pressure is significantly low. Once the light is illuminated, your tires are under-inflated and need to be inflated to the manufacturer's recommended tire pressure. Even if the light turns on and a short time later turns off, your tire pressure still needs to be checked.

When Your Temporary Spare Tire is Installed

When one of your road tires needs to be replaced with the temporary spare, the system will continue to identify an issue to remind you that the damaged road wheel and tire assembly needs to be repaired and put back on your vehicle.

To restore the full function of the tire pressure monitoring system, have the damaged road wheel and tire assembly repaired and remounted on your vehicle.

When You Believe Your System is Not Operating Properly

The main function of the tire pressure monitoring system is to warn you when your tires need air. It can also warn you in the event the system is no longer capable of functioning as intended. See the following chart for information concerning your tire pressure monitoring system:

2017 Fiesta (CCT) Canada/United States of America, HE8J 19A321 AB enUSA, Edition date: 201607, Second Printing

Low tire pressure warning light	Possible cause	Customer action required
Solid warning light	Tire(s) under-inflated	Make sure tires are at the proper pressure. See Inflating your tires in this chapter. After inflating your tires to the manufacturer's recommended pressure as shown on the Tire Label (located on the edge of driver's door or the B-Pillar), the vehicle must be driven for at least two minutes over 20 mph (32 km/h) before the light turns off.
	Spare tire in use	Repair the damaged road wheel and tire assembly and reinstall it on the vehicle to restore system function. For a description on how the system functions, see **When your temporary spare tire is installed** in this section.
	TPMS malfunction	If the tires are properly inflated and the spare tire is not in use but the light remains on, contact your authorized dealer as soon as possible.
Flashing warning light	Spare tire in use	Repair the damaged road wheel and tire assembly and reinstall it on the vehicle to restore system function. For a description on how the system functions, see **When your temporary spare tire is installed** in this section.
	TPMS malfunction	If the tires are properly inflated and the spare tire is not in use but the light remains on, contact your authorized dealer as soon as possible.

When Inflating Your Tires

When putting air into your tires (such as at a gas station or in your garage), the tire pressure monitoring system may not respond immediately to the air added to your tires.

It may take up to two minutes of driving over 20 mph (32 km/h) for the light to turn off after you have filled your tires to the recommended inflation pressure

2017 Fiesta (CCT) Canada/United States of America, HE8J 19A321 AB enUSA, Edition date: 201607, Second Printing

How Temperature Affects Your Tire Pressure

The tire pressure monitoring system monitors tire pressure in each pneumatic tire. While driving in a normal manner, a typical passenger tire inflation pressure may increase about 2–4 psi (14–28 kPa) from a cold start situation. If the vehicle is stationary overnight with the outside temperature significantly lower than the daytime temperature, the tire pressure may decrease about 3 psi (21 kPa) for a drop of 30ºF (17ºC) in ambient temperature. This lower pressure value may be detected by the tire pressure monitoring system as being significantly lower than the recommended inflation pressure and activate the system warning light for low tire pressure. If the low tire pressure warning light is on, visually check each tire to verify that no tire is flat. If one or more tires are flat, repair as necessary. Check the air pressure in the road tires. If any tire is under-inflated, carefully drive the vehicle to the nearest location where air can be added to the tires. Inflate all the tires to the recommended inflation pressure.

CHANGING A ROAD WHEEL

WARNINGS

The use of tire sealants may damage your tire pressure monitoring system and should only be used in roadside emergencies. If you must use a sealant, the Ford Tire Mobility Kit sealant should be used. The tire pressure monitoring system sensor and valve stem on the wheel must be replaced by an authorized dealer after use of the sealant.

See **Tire Pressure Monitoring System** (page 234). If the tire pressure monitor sensor becomes damaged, it will no longer function.

Note: *The tire pressure monitoring system indicator light will illuminate when the spare tire is in use. To restore the full functionality of the monitoring system, all road wheels equipped with tire pressure monitoring sensors must be mounted on the vehicle.*

If you get a flat tire while driving, do not apply the brake heavily. Instead, gradually decrease your speed. Hold the steering wheel firmly and slowly move to a safe place on the side of the road.

Have a flat serviced by an authorized dealer in order to prevent damage to the tire pressure monitoring system sensors. See **Tire Pressure Monitoring System** (page 234). Replace the spare tire with a road tire as soon as possible. During repairing or replacing of the flat tire, have an authorized dealer inspect the tire pressure monitoring system sensor for damage.

Dissimilar Spare Wheel and Tire Assembly Information

WARNING

Failure to follow these guidelines could result in an increased risk of loss of vehicle control, injury or death.

If you have a dissimilar spare wheel and tire, then it is intended for temporary use only. This means that if you need to use it, you should replace it as soon as possible with a road wheel and tire assembly that is the same size and type as the road tires and wheels that were originally provided by Ford. If the dissimilar spare tire or wheel is damaged, it should be replaced rather than repaired.

A dissimilar spare wheel and tire assembly is defined as a spare wheel and tire assembly that is different in brand, size or appearance from the road tires and wheels and can be one of three types:

2017 Fiesta (CCT) Canada/United States of America, HE8J 19A321 AB enUSA, Edition date: 201607, Second Printing

1. **T-type mini-spare:** This spare tire begins with the letter T for tire size and may have Temporary Use Only molded in the sidewall.

2. **Full-size dissimilar spare with label on wheel:** This spare tire has a label on the wheel that states: THIS WHEEL AND TIRE ASSEMBLY FOR TEMPORARY USE ONLY.

When driving with one of the dissimilar spare tires listed above, do not:

- Exceed 50 mph (80 km/h).
- Load the vehicle beyond maximum vehicle load rating listed on the Safety Compliance Label.
- Tow a trailer.
- Use more than one dissimilar spare tire at a time.
- Use commercial car washing equipment.
- Try to repair the dissimilar spare tire.

Use of one of the dissimilar spare tires listed above at any one wheel location can lead to impairment of the following:

- Handling, stability and braking performance.
- Comfort and noise.
- Ground clearance and parking at curbs.
- Winter weather driving capability.
- Wet weather driving capability.
- All-wheel driving capability (if applicable).

3. **Full-size dissimilar spare without label on wheel**

When driving with the full-size dissimilar spare wheel and tire assembly, do not:

- Exceed 70 mph (113 km/h).
- Use more than one dissimilar spare wheel and tire assembly at a time.
- Use commercial car washing equipment.

The usage of a full-size dissimilar spare wheel and tire assembly can lead to impairment of the following:

- Handling, stability and braking performance.
- Comfort and noise.
- Ground clearance and parking at curbs.
- Winter weather driving capability.
- Wet weather driving capability.
- All-wheel driving capability.

When driving with the full-size dissimilar spare wheel and tire assembly additional caution should be given to:

- Towing a trailer.
- Driving vehicles equipped with a camper body.
- Driving vehicles with a load on the cargo rack.

Drive cautiously when using a full-size dissimilar spare wheel and tire assembly and seek service as soon as possible.

Tire Change Procedure

WARNINGS

When one of the front wheels is off the ground, the transmission alone will not prevent the vehicle from moving or slipping off the jack, even if the transmission selector lever is in park (P).

To help prevent your vehicle from moving when you change a tire, be sure to place the transmission selector lever in park (P), set the parking brake and block (in both directions) the wheel that is diagonally opposite (other side and end of the vehicle) to the tire being changed.

Never get underneath a vehicle that is supported only by a jack. If your vehicle slips off the jack, you or someone else could be seriously injured.

2017 Fiesta (CCT) Canada/United States of America, HE8J 19A321 AB enUSA, Edition date: 201607, Second Printing

WARNINGS

Do not attempt to change a tire on the side of the vehicle close to moving traffic. Pull far enough off the road to avoid the danger of being hit when operating the jack or changing the wheel.

Always use the jack provided as original equipment with your vehicle. If using a jack other than the one provided as original equipment with your vehicle, make sure the jack capacity is adequate for the vehicle weight, including any vehicle cargo or modifications.

Make sure there is no lubrication (grease or oil) on the threads or the surface between the wheel lugs and nuts. This can cause the lug nuts to loosen while driving.

Note: *Passengers should not remain in the vehicle when the vehicle is being jacked.*

1. Park on a level surface, set the parking brake and activate the hazard flashers.
2. Place the transmission in park (P) (automatic transmission) or reverse (R) (manual transmission) and turn the engine off.
3. Remove the carpeted wheel cover.
4. Remove the spare tire bolt securing the spare tire by turning it counterclockwise.
5. Remove the spare tire from the spare tire compartment.
6. Remove the retaining bolt securing the jack by turning it counterclockwise.
7. Remove the jack.

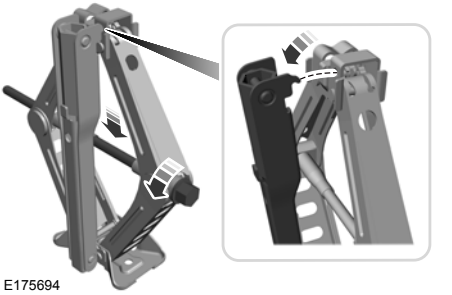

E175694

8. To remove the wrench from the jack, turn the hex nut on the jack counterclockwise. This will lower the jack and loosen the mechanical lock.

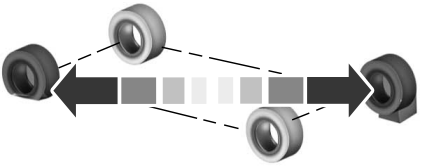

E142551

9. Block the diagonally opposite wheel.
10. Loosen each wheel lug nut one-half turn counterclockwise but do not remove them until the wheel is raised off the ground.

Note: *Jack at the specified locations to avoid damage to the vehicle.*

11. The vehicle jacking points are shown here, and are depicted on the yellow warning label on the jack.

2017 Fiesta (CCT) Canada/United States of America, HE8J 19A321 AB enUSA, Edition date: 201607, Second Printing

E145908

12. Indentations in the sills show the location of the jacking points.

E142553

13. Remove the lug nuts with the lug wrench.
14. Replace the flat tire with the spare tire, making sure the valve stem is facing outward. Reinstall the lug nuts until the wheel is snug against the hub. Do not fully tighten the lug nuts until the wheel has been lowered.
15. Lower the wheel by turning the jack handle counterclockwise.

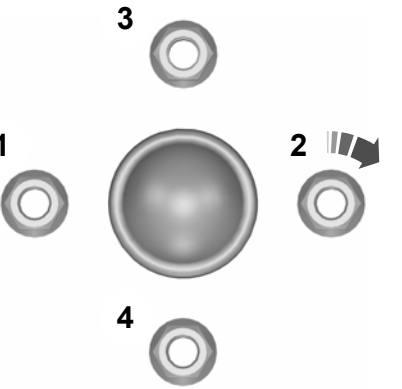

E90589

16. Remove the jack and fully tighten the lug nuts in the order shown. See **Technical Specifications** (page 242).

Stowing the Flat Tire

The full-size road wheel can be stowed in the spare tire compartment.

1. Lift the carpeted wheel cover at an angle to access the spare tire compartment.
2. Place the wheel in the spare tire well with the valve stem facing down. Use the mini-spare bolt to secure the wheel.
3. Place the jack and tools back into the spare tire compartment.
4. Replace the carpeted wheel cover.

2017 Fiesta (CCT) Canada/United States of America, HE8J 19A321 AB enUSA, Edition date: 201607, Second Printing

TECHNICAL SPECIFICATIONS

Wheel Lug Nut Torque Specifications

WARNING

When a wheel is installed, always remove any corrosion, dirt or foreign materials present on the mounting surfaces of the wheel or the surface of the wheel hub, brake drum or brake disc that contacts the wheel. Make sure that any fasteners that attach the rotor to the hub are secured so they do not interfere with the mounting surfaces of the wheel. Installing wheels without correct metal-to-metal contact at the wheel mounting surfaces can cause the wheel nuts to loosen and the wheel to come off while your vehicle is in motion, resulting in loss of control.

Bolt size	lb-ft (Nm)*
M12 x 1.5	100 (135)

*Torque specifications are for nut and bolt threads free of dirt and rust. Use only Ford recommended replacement fasteners.

Retighten the lug nuts to the specified torque within 100 miles (160 kilometers) after any wheel disturbance (such as tire rotation, changing a flat tire, wheel removal).

A Wheel pilot bore.

Inspect the wheel pilot bore and mounting surface prior to installation. Remove any visible corrosion or loose particles.

2017 Fiesta (CCT) Canada/United States of America, HE8J 19A321 AB enUSA, Edition date: 201607, Second Printing

ENGINE SPECIFICATIONS - 1.0L ECOBOOST™

Specification	
Cubic inches.	61
Compression ratio.	10:1
Spark plug gap.	0.026–0.030 in (0.65–0.75 mm)
Required fuel.	Minimum 87 octane

ENGINE SPECIFICATIONS - 1.6L DURATEC-16V TI-VCT (SIGMA)

Specification	
Cubic inches.	98
Compression ratio.	11:1
Spark plug gap.	0.028–0.031 in (0.7–0.8 mm)
Required fuel.	Minimum 87 octane

TRANSMISSION SPECIFICATIONS - 1.0L ECOBOOST™, AUTOMATIC TRANSMISSION

Gear Ratios

Item	Ratio
1st gear	4.182:1
2nd gear	2.429:1
3rd gear	1.436:1
4th gear	0.959:1
5th gear	0.804:1
6th gear	0.633:1
Reverse gear	3.508:1
Final drive: 1st, 2nd, 5th and 6th gears	4.105:1
Final drive: 3rd, 4th and reverse gears	4.588:1

2017 Fiesta (CCT) Canada/United States of America, HE8J 19A321 AB enUSA, Edition date: 201607, Second Printing

TRANSMISSION SPECIFICATIONS - 1.6L DURATEC-16V TI-VCT (SIGMA), AUTOMATIC TRANSMISSION

Gear Ratios

Item	Ratio
1st gear	3.917:1
2nd gear	2.429:1
3rd gear	1.436:1
4th gear	1.021:1
5th gear	0.867:1
6th gear	0.702:1
Reverse gear	3.507:1
Final drive: 1st, 2nd, 5th and 6th gears	4.105:1
Final drive: 3rd, 4th and reverse gears	4.588:1

2017 Fiesta (CCT) Canada/United States of America, HE8J 19A321 AB enUSA, Edition date: 201607, Second Printing

TRANSMISSION SPECIFICATIONS - 5-SPEED MANUAL TRANSMISSION

Gear Ratios

Item	Ratio
1st gear	3.846:1
2nd gear	2.038:1
3rd gear	1.281:1
4th gear	0.951:1
5th gear	0.756:1
Reverse gear	3.615:1
Final drive	4.07:1

2017 Fiesta (CCT) Canada/United States of America, HE8J 19A321 AB enUSA, Edition date: 201607, Second Printing

MOTORCRAFT PARTS - 1.0L ECOBOOST™

We recommend that you demand the use of genuine Ford and Motorcraft parts whenever your vehicle requires scheduled maintenance or repair.

Incorrect component use can cause damage not covered by the vehicle Warranty. The Ford Warranty may not cover damage caused to your vehicle as a result of failed non-Ford parts.

Engine Component	Part Number
Air filter.	FA-1914
Battery.	BXT-96R-500
Oil filter.[1]	FL-910S
Spark plugs.	SP-538A
Cabin air filter.	FP-69
Windshield wiper blade - driver side.	WW-2430
Windshield wiper blade - passenger side.	WW-1613
Rear window wiper blade.	WW-1204

[1] If a Motorcraft oil filter is not available, use an oil filter that meets industry performance specification SAE/USCAR-36.

2017 Fiesta (CCT) Canada/United States of America, HE8J 19A321 AB enUSA, Edition date: 201607, Second Printing

MOTORCRAFT PARTS - 1.6L DURATEC-16V TI-VCT (SIGMA)

We recommend that you demand the use of genuine Ford and Motorcraft parts whenever your vehicle requires scheduled maintenance or repair.

Incorrect component use can cause damage not covered by the vehicle Warranty. The Ford Warranty may not cover damage caused to your vehicle as a result of failed non-Ford parts.

Engine Component	Part Number
Air filter.	FA-1914
Battery.	BXT-96R-500
Oil filter.[1]	FL-910S
Spark plugs.	SP-525
Cabin air filter.	FP-69
Windshield wiper blade - driver side.	WW-2430
Windshield wiper blade - passenger side.	WW-1613
Rear window wiper blade.	WW-1204

[1] If a Motorcraft oil filter is not available, use an oil filter that meets industry performance specification SAE/USCAR-36.

2017 Fiesta (CCT) Canada/United States of America, HE8J 19A321 AB enUSA, Edition date: 201607, Second Printing

VEHICLE IDENTIFICATION NUMBER

The vehicle identification number is located on the left-hand side of the instrument panel.

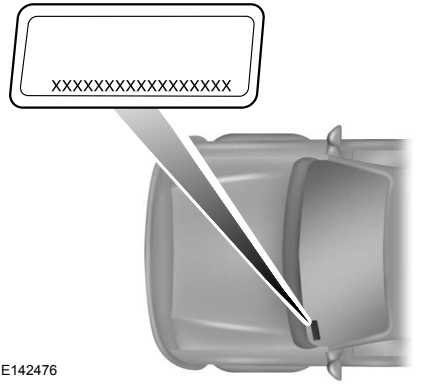

E142476

Please note that in the graphic, XXXX is representative of your vehicle identification number.

The Vehicle Identification Number contains the following information:

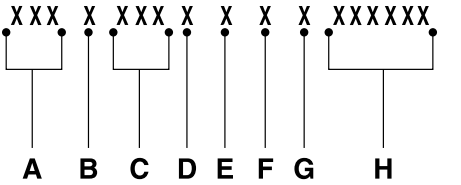

E142477

A	World manufacturer identifier
B	Brake system, Gross Vehicle Weight Rating, Restraint Devices and their locations
C	Make, vehicle line, series, body type
D	Engine type
E	Check digit
F	Model year
G	Assembly plant
H	Production sequence number

2017 Fiesta (CCT) Canada/United States of America, HE8J 19A321 AB enUSA, Edition date: 201607, Second Printing

VEHICLE CERTIFICATION LABEL

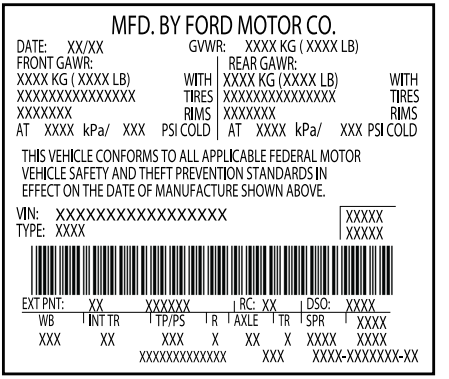

E167469

The National Highway Traffic Safety Administration Regulations require that a Safety Compliance Certification Label be affixed to a vehicle and prescribe where the Safety Compliance Certification Label may be located. The Safety Compliance Certification Label shall be affixed to either the door hinge pillar, the door latch post, or the edge of the door near the door latch, next to the driver's seating position.

TRANSMISSION CODE DESIGNATION

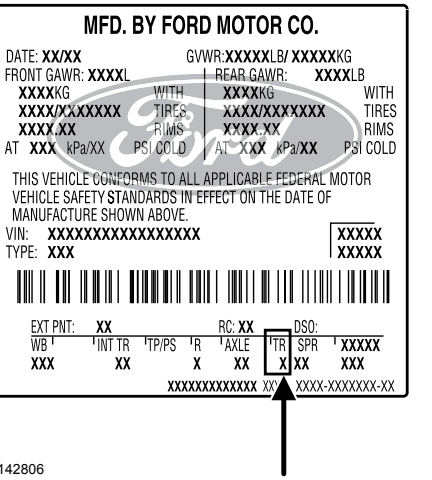

E142806

The transmission code is on the Safety Compliance Certification Label. The following table shows the transmission code along with the transmission description.

Description	Code
Six-speed automatic transmission	A
Six-speed manual transmission	M
Five-speed manual transmission	C

2017 Fiesta (CCT) Canada/United States of America, HE8J 19A321 AB enUSA, Edition date: 201607, Second Printing

CAPACITIES AND SPECIFICATIONS - 1.0L ECOBOOST™

WARNING

The air conditioning refrigerant system contains refrigerant under high pressure. Only qualified personnel should service the air conditioning refrigerant system. Opening the air conditioning refrigerant system can cause personal injury.

Capacities

Item	Quantity
Engine oil fill capacity including the oil filter.	1.2 gal (4.6 L)
Engine oil fill capacity excluding the oil filter.	1.2 gal (4.4 L)
Engine coolant fill capacity.	1.5 gal (5.8 L)
Manual transmission fluid fill capacity.	0.4 gal (1.67 L)
Automatic transmission fluid fill capacity.	0.4 gal (1.7 L)
Air conditioning refrigerant fill capacity.	24 oz (0.675 kg)
Air conditioning refrigerant compressor oil fill capacity.	4.1 fl oz (120 ml)
Fuel tank fill capacity.	12.4 gal (47 L)
Washer system fill capacity.	0.7 gal (2.5 L)

Adding Engine Oil

Quantity
0.7 qt (0.7 L)

The quantity of engine oil required to raise the indicated level on the dipstick from minimum to maximum.

Specifications

Materials

Name	Specification
Motorcraft® SAE 5W-20 Premium Synthetic Blend Motor Oil *(U.S.)* Huile moteur de très haute qualité SAE 5W-20 Motorcraft® *(Canada)* XO-5W20-QSP *(U.S.)*	WSS-M2C945-A

2017 Fiesta (CCT) Canada/United States of America, HE8J 19A321 AB enUSA, Edition date: 201607, Second Printing

Name	Specification
CXO-5W20-LSP6 *(Canada)*	
Motorcraft® SAE 5W-20 Full Synthetic Motor Oil *(U.S.)* Huile moteur synthétique Motorcraft® *(Canada)* XO-5W20-QFS *(U.S.)* CXO-5W20-LFS6 *(Canada)*	WSS-M2C945-A
Motorcraft® Orange Prediluted Antifreeze/Coolant *(U.S.)* Antigel/liquide de refroidissement prédilué orange Motorcraft® *(Canada)* VC-3DIL-B *(U.S.)* CVC-3DIL-B *(Canada)*	WSS-M97B44-D2
Motorcraft® Dual Clutch Transmission Fluid *(U.S.)* Huile pour boîtes embrayage double *(Canada)* XT-11-QDC *(U.S. & Canada)*	WSS-M2C200-D2
Motorcraft® DOT 4 LV High Performance Motor Vehicle Brake Fluid *(U.S.)* Liquide de frein automobile haute performance DOT 4 LV *(Canada)* PM-20 *(U.S. & Canada)*	WSS-M6C65-A2
Motorcraft® R-134a Refrigerant *(U.S.)* Frigorigène R-134a Motorcraft® *(Canada)* YN-19 *(U.S.)* CYN-16-R *(Canada)*	WSH-M17B19-A
Motorcraft® PAG Refrigerant Compressor Oil *(U.S.)* Huile PAG pour compresseur frigorifique Motorcraft® *(Canada)* YN-12-D *(U.S. & Canada)*	WSH-M1C231-B
Motorcraft® Premium Windshield Wash Concentrate with Bitterant *(U.S.)* Liquide lave-glace de haute qualité *(Canada)* ZC-32-B2 *(U.S.)* CXC-37-A/B/D/F *(Canada)*	WSS-M14P19-A
Motorcraft® Multi-Purpose Grease Spray *(U.S.)* Graisse multiusage *(Canada)* XL-5-A *(U.S. & Canada)*	ESB-M1C93-B
Penetrating and Lock Lubricant *(U.S.)* Liquide dégrippant *(Canada)* XL-1 *(U.S.)* CXC-51-A *(Canada)*	-

Motor oils of the recommended viscosity grade that meet API SN requirements and display the API Certification Mark for gasoline engines are also acceptable. Do not use oil labeled with API SN service category unless the label also displays the API certification mark.

2017 Fiesta (CCT) Canada/United States of America, HE8J 19A321 AB enUSA, Edition date: 201607, Second Printing

E142732

An oil that displays this symbol conforms to current engine, emission system and fuel economy performance standards of the International Lubricants Specification Advisory Committee (ILSAC).

If you are unable to find an engine oil that meets the specifications defined by WSS-M2C945-A, it is acceptable to use a SAE 5W-20 engine oil that meets API SN requirements and displays the API Certification Mark for gasoline engines.

Note: *Do not use more than 1.1 qt (1 L) of the alternative engine oil between scheduled service intervals.*

Using oil and fluids that do not meet the defined specification and viscosity grade may lead to:

- Component damage which may not be covered by the vehicle Warranty.
- Longer engine cranking periods.
- Increased emission levels.
- Reduced engine performance.
- Reduced fuel economy.
- Reduced brake performance.

Do not use supplemental engine oil additives because they are unnecessary and could lead to engine damage that may not be covered by the vehicle Warranty.

Alternative Engine Oil for Extreme Cold Climates

To improve engine cold start performance, we recommend that you use the following alternative engine oil where the ambient temperature reaches -22.0ºF (-30ºC) or below.

Materials

Name	Specification
Motorcraft® SAE 0W-20 Synthetic Blend Motor Oil Engine Oil - SAE 0W-20 XO-0W20-QSP *(U.S.)*	WSS-M2C947-A

2017 Fiesta (CCT) Canada/United States of America, HE8J 19A321 AB enUSA, Edition date: 201607, Second Printing

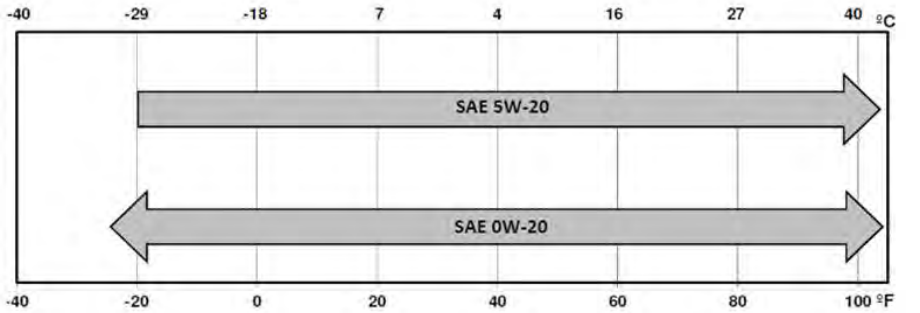

E240522

CAPACITIES AND SPECIFICATIONS - 1.6L DURATEC-16V TI-VCT (SIGMA)

WARNING

The air conditioning refrigerant system contains refrigerant under high pressure. Only qualified personnel should service the air conditioning refrigerant system. Opening the air conditioning refrigerant system can cause personal injury.

Capacities

Item	Quantity
Engine oil fill capacity including the oil filter.	1.1 gal (4.05 L)
Engine oil fill capacity excluding the oil filter.	1.0 gal (3.75 L)
Engine coolant fill capacity.	1.5 gal (5.5 L)
Manual transmission fluid fill capacity.	0.4 gal (1.67 L)
Automatic transmission fluid fill capacity.	0.5 gal (1.8 L)
Air conditioning refrigerant fill capacity.	21 oz (0.6 kg)

2017 Fiesta (CCT) Canada/United States of America, HE8J 19A321 AB enUSA, Edition date: 201607, Second Printing

Item	Quantity
Air conditioning refrigerant compressor oil fill capacity.	5.1 fl oz (150 ml)
Fuel tank fill capacity.	12.4 gal (47 L)
Washer system fill capacity.	0.7 gal (2.5 L)

Adding Engine Oil

Quantity
0.7 qt (0.7 L)

The quantity of engine oil required to raise the indicated level on the dipstick from minimum to maximum.

Specifications

Materials

Name	Specification
Motorcraft® SAE 5W-20 Premium Synthetic Blend Motor Oil *(U.S.)* Huile moteur de très haute qualité SAE 5W-20 Motorcraft® *(Canada)* XO-5W20-QSP *(U.S.)* CXO-5W20-LSP6 *(Canada)*	WSS-M2C945-A
Motorcraft® SAE 5W-20 Full Synthetic Motor Oil *(U.S.)* Huile moteur synthétique Motorcraft® *(Canada)* XO-5W20-QFS *(U.S.)* CXO-5W20-LFS6 *(Canada)*	WSS-M2C945-A
Motorcraft® Orange Prediluted Antifreeze/Coolant *(U.S.)* Antigel/liquide de refroidissement prédilué orange Motorcraft® *(Canada)* VC-3DIL-B *(U.S.)* CVC-3DIL-B *(Canada)*	WSS-M97B44-D2
Motorcraft® Dual Clutch Transmission Fluid *(U.S.)* Huile pour boîtes embrayage double *(Canada)* XT-11-QDC *(U.S. & Canada)*	WSS-M2C200-D2
Motorcraft® DOT 4 LV High Performance Motor Vehicle Brake Fluid *(U.S.)* Liquide de frein automobile haute performance DOT 4 LV *(Canada)* PM-20 *(U.S. & Canada)*	WSS-M6C65-A2
Motorcraft® R-134a Refrigerant *(U.S.)* Frigorigène R-134a Motorcraft® *(Canada)* YN-19 *(U.S.)*	WSH-M17B19-A

2017 Fiesta (CCT) Canada/United States of America, HE8J 19A321 AB enUSA, Edition date: 201607, Second Printing

Name	Specification
CYN-16-R *(Canada)*	
Motorcraft® PAG Refrigerant Compressor Oil *(U.S.)* Huile PAG pour compresseur frigorifique Motorcraft® *(Canada)* YN-12-D *(U.S. & Canada)*	WSH-M1C231-B
Motorcraft® Premium Windshield Wash Concentrate with Bitterant *(U.S.)* Liquide lave-glace de haute qualité *(Canada)* ZC-32-B2 *(U.S.)* CXC-37-A/B/D/F *(Canada)*	WSS-M14P19-A
Motorcraft® Multi-Purpose Grease Spray *(U.S.)* Graisse multiusage *(Canada)* XL-5-A *(U.S. & Canada)*	ESB-M1C93-B
Penetrating and Lock Lubricant *(U.S.)* Liquide dégrippant *(Canada)* XL-1 *(U.S.)* CXC-51-A *(Canada)*	-

Motor oils of the recommended viscosity grade that meet API SN requirements and display the API Certification Mark for gasoline engines are also acceptable. Do not use oil labeled with API SN service category unless the label also displays the API certification mark.

E142732

An oil that displays this symbol conforms to current engine, emission system and fuel economy performance standards of the International Lubricants Specification Advisory Committee (ILSAC).

If you are unable to find an engine oil that meets the specification defined by WSS-M2C945-A, it is acceptable to use a SAE 5W-20 engine oil that meets API SN requirements and displays the API Certification Mark for gasoline engines.

Note: *Do not use more than 1.1 qt (1 L) of the alternative engine oil between scheduled service intervals.*

Using oil and fluids that do not meet the defined specification and viscosity grade may lead to:

- Component damage which may not be covered by the vehicle Warranty.
- Longer engine cranking periods.
- Increased emission levels.
- Reduced engine performance.
- Reduced fuel economy.
- Reduced brake performance.

Do not use supplemental engine oil additives because they are unnecessary and could lead to engine damage that may not be covered by the vehicle Warranty.

2017 Fiesta (CCT) Canada/United States of America, HE8J 19A321 AB enUSA, Edition date: 201607, Second Printing

Alternative Engine Oil for Extreme Cold Climates

To improve engine cold start performance, we recommend that you use the following alternative engine oil in extreme cold climates, where the ambient temperature reaches -22.0ºF (-30ºC) or below.

Materials

Name	Specification
Motorcraft® SAE 0W-20 Synthetic Blend Motor Oil Engine Oil - SAE 0W-20 XO-0W20-QSP *(U.S.)*	WSS-M2C947-A

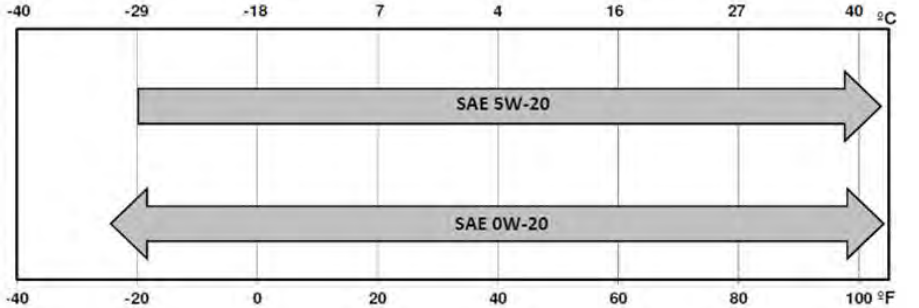

E240522

2017 Fiesta (CCT) Canada/United States of America, HE8J 19A321 AB enUSA, Edition date: 201607, Second Printing

GENERAL INFORMATION

Radio Frequencies and Reception Factors

Radio reception factors	
Distance and Strength	The further you travel away from an FM station, the weaker the signal and the weaker the reception.
Terrain	Hills, mountains, tall buildings, bridges, tunnels, freeway overpasses, parking garages, dense tree foliage and thunderstorms can interfere with the reception.
Station overload	When you pass near a radio transmission tower, a stronger signal can override a weaker signal and can cause interference in the audio system.

CD and CD Player Information

Note: *CD units play commercially pressed 4.75-inch (12 centimeter) audio compact discs only. Due to technical incompatibility, certain recordable and re-recordable compact discs may not function correctly when used in Ford CD players.*

Note: *Do not insert CDs with homemade paper (adhesive) labels into the CD player as the label may peel and cause the CD to become jammed. You should use a permanent felt tip marker rather than adhesive labels on your homemade CDs. Ballpoint pens may damage CDs. Please contact an authorized dealer for further information.*

Note: *Do not use any irregularly shaped discs or discs with a scratch protection film attached.*

Always handle discs by their edges only. Clean the disc with an approved CD cleaner only. Wipe it from the center of the disc toward the edge. Do not clean in a circular motion.

Do not expose discs to direct sunlight or heat sources for extended periods.

MP3 and WMA Track and Folder Structure

Audio systems capable of recognizing and playing MP3 and WMA individual tracks and folder structures work as follows:

- There are two different modes for MP3 and WMA disc playback: MP3 and WMA track mode (system default) and MP3 and WMA folder mode.
- MP3 and WMA track mode ignores any folder structure on the MP3 and WMA disc. The player numbers each MP3 and WMA track on the disc (noted by the MP3 or WMA file extension) from T001 to a maximum of T255. The maximum number of playable MP3 and WMA files may be less depending on the structure of the CD and exact model of radio present.

2017 Fiesta (CCT) Canada/United States of America, HE8J 19A321 AB enUSA, Edition date: 201607, Second Printing

- MP3 and WMA folder mode represents a folder structure consisting of one level of folders. The CD player numbers all MP3 and WMA tracks on the disc (noted by the MP3 or WMA file extension) and all folders containing MP3 and WMA files, from F001 (folder) T001 (track) to F253 T255.
- Creating discs with only one level of folders helps with navigation through the disc files.

If you are burning your own MP3 and WMA discs, it is important to understand how the system reads the structures you create. While various files may be present, (files with extensions other than MP3 and WMA), only files with the MP3 and WMA extension are played; other files are ignored by the system. This enables you to use the same MP3 and WMA disc for a variety of tasks on your work computer, home computer and your in-vehicle system.

In track mode, the system displays and plays the structure as if it were only one level deep (all MP3 and WMA files play, regardless of being in a specific folder). In folder mode, the system only plays the MP3 and WMA files in the current folder.

AUDIO UNIT - VEHICLES WITH: AM/FM/CD

WARNING

Driving while distracted can result in loss of vehicle control, crash and injury. We strongly recommend that you use extreme caution when using any device that may take your focus off the road. Your primary responsibility is the safe operation of your vehicle. We recommend against the use of any hand-held device while driving and encourage the use of voice-operated systems when possible. Make sure you are aware of all applicable local laws that may affect the use of electronic devices while driving.

2017 Fiesta (CCT) Canada/United States of America, HE8J 19A321 AB enUSA, Edition date: 201607, Second Printing

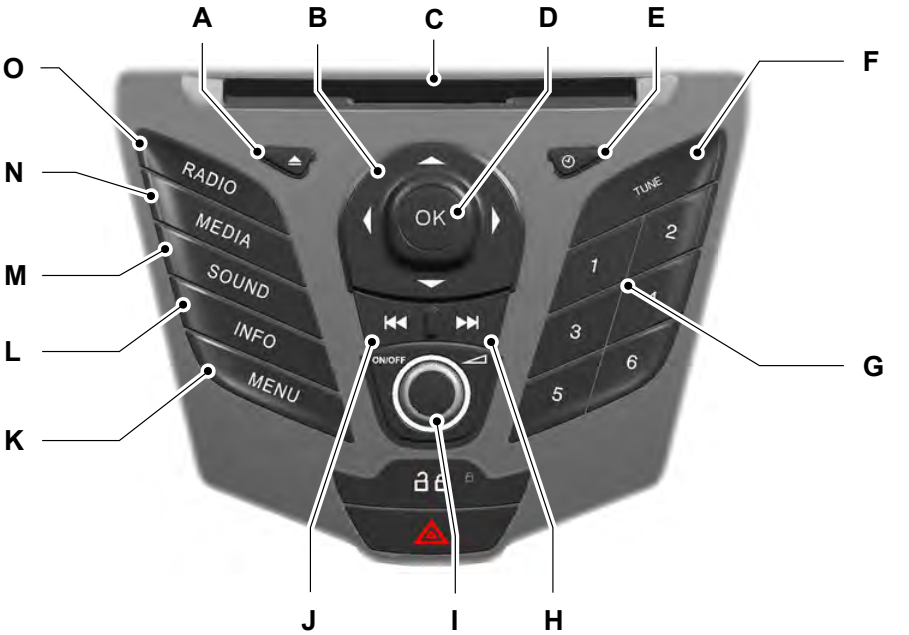

E156613

A **Eject:** Press the button to eject a CD.

B **Cursor arrows:** Press a button to scroll through on-screen choices.

C **CD slot:** Where you insert a CD.

D **OK:** Press the button to confirm on-screen selections.

E **Clock:** Press to set the time. Use the **H** and **M** buttons outside the audio display to adjust the hours and minutes. Press **OK** to finish. (The clock can also be set by pressing **MENU**, then scrolling to the clock settings menu.)

F **Tune:** Press the button to manual tune on AM and FM wavebands.

G **Numeric keypad:** Press the button to recall a previously stored station. To store a favorite station press and hold until the sound returns.

H **Seek up:** Press the button to go to the next station up the radio frequency band or the next track on a CD.

2017 Fiesta (CCT) Canada/United States of America, HE8J 19A321 AB enUSA, Edition date: 201607, Second Printing

I **On, Off and Volume:** Press the button to switch the audio system on or off. Turn the dial to adjust the volume.

J **Seek down:** Press the button to go to the next station down the radio frequency band or the previous track on a CD.

K **MENU:** Press the button to access different audio system features.

L **INFO:** Press the button to access radio or CD information.

M **SOUND:** Press the button to adjust the sound settings for bass, treble, middle, balance and fade.

N **MEDIA:** Press the button to access the AUX and SYNC features, it will also cancel the menu or list browsing.

O **RADIO:** Press the button to select different radio bands, it will also cancel the menu or list browsing.

Sound Button

This will allow you to adjust the sound settings (for example bass, middle and treble).

1. Press the **SOUND** button.
2. Use the up and down arrow buttons to select the required setting.
3. Use the left and right arrow buttons to make the necessary adjustment. The display indicates the level selected.
4. Press the **OK** button to confirm the new settings.

Waveband Button

Press the **RADIO** button to select from the wavebands available.

You can use the selector to return to radio reception when you have been listening to another source.

Alternatively, press the left arrow button to display the available wavebands. Scroll to the required waveband and press **OK**.

Station Tuning Control

Seek Tuning

Select a waveband and briefly press one of the seek buttons. The unit will stop at the first station it finds in the direction you have chosen.

Manual Tuning

1. Press the **MENU** button.
2. Select **RADIO** mode and then **Manual**.
3. Use the left and right arrow buttons to tune down or up the waveband in small increments or press and hold to increment quickly, until you find a station you want to listen to.
4. Press **OK** to continue listening to a station.

Scan Tuning

Scan allows you to listen to a few seconds of each station detected.

1. Press the **MENU** button.
2. Select **RADIO** mode and then **Scan**.
3. Use the seek buttons to scan up or down the selected waveband.

2017 Fiesta (CCT) Canada/United States of America, HE8J 19A321 AB enUSA, Edition date: 201607, Second Printing

4. Press **OK** to continue listening to a station.

Station Preset Buttons

This feature allows you to store your favorite stations, they can be recalled by selecting the appropriate waveband and pressing one of the preset buttons.

1. Select a waveband.
2. Tune to the station required.
3. Press and hold one of the preset buttons. A progress bar and message will appear. When the progress bar completes the station has been stored. The audio unit will also mute momentarily as confirmation.

You can repeat this on each waveband and for each preset button.

Note: *When you drive to another part of the country, stations that broadcast on alternative frequencies and are stored on preset buttons, may be updated with the correct frequency and station name for that area.*

Autostore Control

Note: *This will store up to a maximum of the six strongest signals available, either from the AM or the FM waveband and overwrite the previously stored stations. You can also store stations manually in the same way as other wavebands.*

- Press and hold the **RADIO** button.
- When the search is complete, sound is restored and the strongest signals are stored on the autostore presets.

Automatic Volume Control

When available, automatic volume control adjusts the volume level to compensate for engine noise and road speed noise.

1. Press the **MENU** button and select **Audio Settings**.
2. Select **Spd. Comp. Vol**.
3. Use the left or right arrow button to adjust the setting.
4. Press the **OK** button to confirm your selection.
5. Press the **MENU** button to return.

Alternative Frequencies

The majority of programs that broadcast on the FM waveband have a program identification code that can be recognized by audio units.

When your vehicle moves from one transmission area to another with the alternative frequencies tuning switched on, this function will search for the strongest station signal.

Under certain conditions, alternative frequencies tuning may temporarily disrupt normal reception.

When selected, the unit continually evaluates signal strength and if a better signal becomes available, the unit will switch to that alternative. It mutes while it checks a list of alternative frequencies and if necessary, it will search once across the selected waveband for a genuine alternative frequency.

It will restore radio reception when it finds one or if one is not found, the unit will return to the original stored frequency.

When selected, **AF** will be shown in the display.

1. Press the **MENU** button.
2. Select **Audio Settings**.
3. Scroll to **Alternat. freq.** or **Alt. Frequency** and turn on or off with the **OK** button.
4. Press the **MENU** button to return.

2017 Fiesta (CCT) Canada/United States of America, HE8J 19A321 AB enUSA, Edition date: 201607, Second Printing

AUDIO UNIT - VEHICLES WITH: AM/FM/CD/SYNC

WARNING

Driving while distracted can result in loss of vehicle control, crash and injury. We strongly recommend that you use extreme caution when using any device that may take your focus off the road. Your primary responsibility is the safe operation of your vehicle. We recommend against the use of any hand-held device while driving and encourage the use of voice-operated systems when possible. Make sure you are aware of all applicable local laws that may affect the use of electronic devices while driving.

Note: *An integrated multi function display is situated above the unit. This shows important information regarding control of your system. Additionally, there are various icons placed around the display screen which light up when a function is active, for example CD, Radio or Aux.*

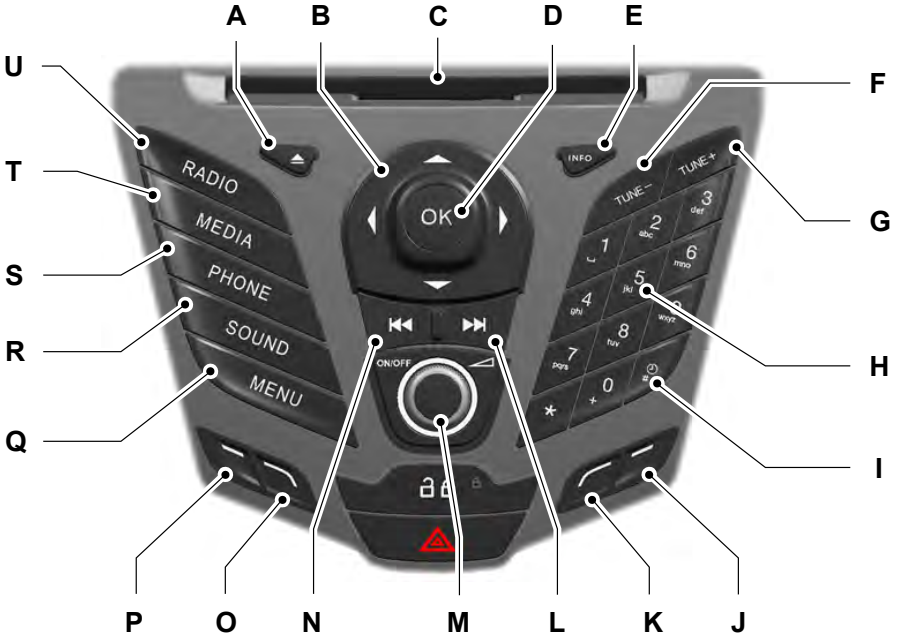

E156629

A **Eject:** Press the button to eject a CD.

B **Cursor arrows:** Press a button to scroll through on-screen choices.

C **CD slot:** Where you insert a CD.

D **OK:** Press the button to confirm on-screen selections.

E **INFO:** Press the button to access radio, CD, USB and IPod information.

F **TUNE -:** Press the button to manual tune down the waveband.

G **TUNE +:** Press the button to manual tune up the waveband.

H **Numeric keypad:** Press the button to recall a previously stored station. To store a favorite station press and hold until the sound returns.

I **Clock:** Press the button to set the clock, except when in phone mode.

J **Function button 4:** Press the button to select different functions of the audio system depending on which mode (i.e. radio or CD) you are in.

K **Function button 3:** Press the button to select different functions of the audio system depending on which mode (i.e. radio or CD) you are in.

L **Seek up:** Press the button to go to the next station up the radio frequency band or the next track on a CD.

M **On, Off and Volume:** Press the button to switch the audio system on or off. Turn the dial to adjust the volume.

N **Seek down:** Press the button to go to the next station down the radio frequency band or the previous track on a CD.

O **Function button 2:** Press the button to select different functions of the audio system depending on which mode (i.e. radio or CD) you are in.

P **Function button 1:** Press the button to select different functions of the audio system depending on which mode (i.e. radio or CD) you are in.

Q **MENU:** Press the button to access different audio system features.

R **SOUND:** Press the button to adjust the sound settings for bass, treble, middle, balance and fade.

S **PHONE:** Press the button to access the phone feature of the SYNC system by pressing **PHONE** then **MENU**. See separate manual.

T **MEDIA:** Press the button to access the AUX and SYNC features, it will also cancel the menu or list browsing.

U **RADIO:** Press the button to select different radio bands, it will also cancel the menu or list browsing.

2017 Fiesta (CCT) Canada/United States of America, HE8J 19A321 AB enUSA, Edition date: 201607, Second Printing

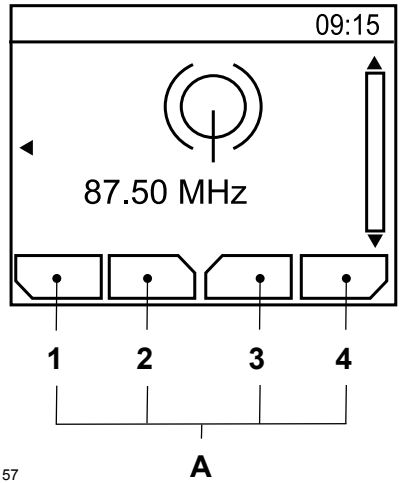

E104157

A Descriptions for function buttons 1-4

Function buttons 1 to 4 are context dependent, and change according to the current unit mode. The description for the current function displays in the screen.

Sound Button

This will allow you to adjust the sound settings (for example bass, middle and treble).

1. Press the **SOUND** button.
2. Use the up and down arrow buttons to select the required setting.
3. Use the left and right arrow buttons to make the necessary adjustment. The display indicates the level selected.
4. Press the **OK** button to confirm the new settings.

Waveband Button

Press the **RADIO** button to select from the wavebands available.

You can use the selector to return to radio reception when you have been listening to another source.

Alternatively, press the left arrow button to display the available wavebands. Scroll to the required waveband and press **OK**.

Station Tuning Control

Seek Tuning

Select a waveband and briefly press one of the seek buttons. The unit will stop at the first station it finds in the direction you have chosen.

Manual Tuning

1. Press **function button 2**.
2. Use the left and right arrow buttons to tune down or up the waveband in small increments or press and hold to increment quickly, until you find a station you want to listen to.
3. Press **OK** to continue listening to a station.

Scan Tuning

Scan allows you to listen to a few seconds of each station detected.

1. Press **function button 3**.
2. Use the seek buttons to scan up or down the selected waveband.
3. Press **function button 3** again or **OK** to continue listening to a station.

Station Preset Buttons

This feature allows you to store your favorite stations, they can be recalled by selecting the appropriate waveband and pressing one of the preset buttons.

1. Select a waveband.
2. Tune to the station required.

2017 Fiesta (CCT) Canada/United States of America, HE8J 19A321 AB enUSA, Edition date: 201607, Second Printing

3. Press and hold one of the preset buttons. A progress bar and message will appear. When the progress bar completes the station has been stored. The audio unit will also mute momentarily as confirmation.

You can repeat this on each waveband and for each preset button.

Note: *When you drive to another part of the country, stations that broadcast on alternative frequencies, and are stored on preset buttons, may be updated with the correct frequency and station name for that area.*

Autostore Control

Note: *This will store up to a maximum of the 10 strongest signals available, either from the AM or the FM waveband, and overwrite the previously stored stations. You can also store stations manually in the same way as other wavebands.*

- Press and hold the **RADIO** button.
- When the search is complete, sound is restored and the strongest signals are stored on the autostore presets.

Automatic Volume Control

When available, automatic volume control adjusts the volume level to compensate for engine noise and road speed noise.

1. Press the **MENU** button and select**Audio Settings**.
2. Select **Spd. Comp. Vol**.
3. Use the left or right arrow button to adjust the setting.
4. Press the **OK** button to confirm your selection.
5. Press the **MENU** button to return.

Alternative Frequencies

The majority of programs that broadcast on the FM waveband have a program identification code, it can be recognized by audio units.

When your vehicle moves from one transmission area to another with the alternative frequencies tuning switched on, this function will search for the strongest station signal.

Under certain conditions, alternative frequencies tuning may temporarily disrupt normal reception.

When selected, the unit continually evaluates signal strength and, if a better signal becomes available, the unit will switch to that alternative. It mutes while it checks a list of alternative frequencies and if necessary, it will search once across the selected waveband for a genuine alternative frequency.

It will restore radio reception when it finds one or if one is not found, the unit will return to the original stored frequency.

When selected, **AF** will be shown in the display.

1. Press the **MENU** button.
2. Select **Audio Settings**.
3. Scroll to **Alternat. freq**. or **Alt. Frequency**. and turn on or off with the **OK** button.
4. Press the **MENU** button to return.

2017 Fiesta (CCT) Canada/United States of America, HE8J 19A321 AB enUSA, Edition date: 201607, Second Printing

AUDIO UNIT - VEHICLES WITH: SONY AUDIO SYSTEM/ TOUCHSCREEN DISPLAY

WARNING

Driving while distracted can result in loss of vehicle control, crash and injury. We strongly recommend that you use extreme caution when using any device that may take your focus off the road. Your primary responsibility is the safe operation of your vehicle. We recommend against the use of any hand-held device while driving and encourage the use of voice-operated systems when possible. Make sure you are aware of all applicable local laws that may affect the use of electronic devices while driving.

Note: *The touchscreen controls most of the audio features.*

2017 Fiesta (CCT) Canada/United States of America, HE8J 19A321 AB enUSA, Edition date: 201607, Second Printing

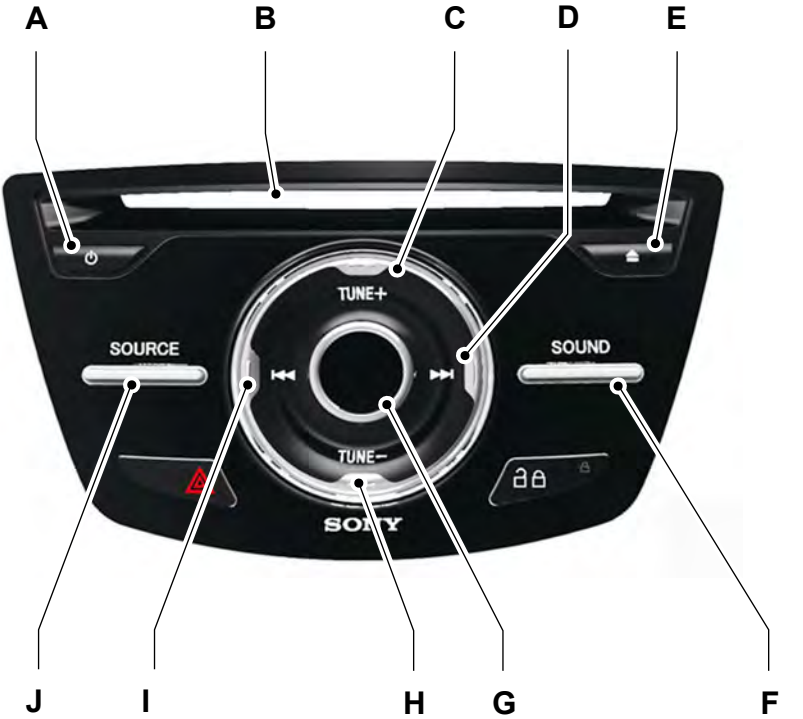

E156663

A **On, Off:** Press the button to switch the audio system on or off.

B **CD Slot** Where you insert a CD.

C **TUNE +:** In radio mode, press this button to manually search forward through the radio frequency band. In SIRIUS mode, press this button to find the next available satellite radio station.

D **Seek up** In radio mode, press this button to go to the next station up the radio frequency band. Press to go to the next track on a CD. In SIRIUS mode, press this button to select the next channel. If a specific category is selected (for example Jazz, Rock or News), use this button to find the next channel in the selected category.

E **Eject:** Press the button to eject a CD.

2017 Fiesta (CCT) Canada/United States of America, HE8J 19A321 AB enUSA, Edition date: 201607, Second Printing

F **SOUND:** Press the button to adjust the sound settings for bass, treble, middle, balance and fade.

G **Volume** Turn the dial to adjust the volume.

H **TUNE -:** In radio mode, press this button to manually search backward through the radio frequency band. In SIRIUS mode, press this button to find the previous available satellite radio station.

I **Seek down** In radio mode, press this button to go to the next station down the radio frequency band. Press to go to the previous track on a CD. In SIRIUS mode, press this button to select the previous channel. If a specific category is selected (for example Jazz, Rock or News), use this button to find the previous channel in the selected category.

J **SOURCE:** Press the button to access different audio modes, for example AM, FM, Satellite radio and A/V input.

Note: *The touchscreen controls most of the audio features.*

AUDIO UNIT - VEHICLES WITH: TOUCHSCREEN DISPLAY

WARNING

Driving while distracted can result in loss of vehicle control, crash and injury. We strongly recommend that you use extreme caution when using any device that may take your focus off the road. Your primary responsibility is the safe operation of your vehicle. We recommend against the use of any hand-held device while driving and encourage the use of voice-operated systems when possible. Make sure you are aware of all applicable local laws that may affect the use of electronic devices while driving.

2017 Fiesta (CCT) Canada/United States of America, HE8J 19A321 AB enUSA, Edition date: 201607, Second Printing

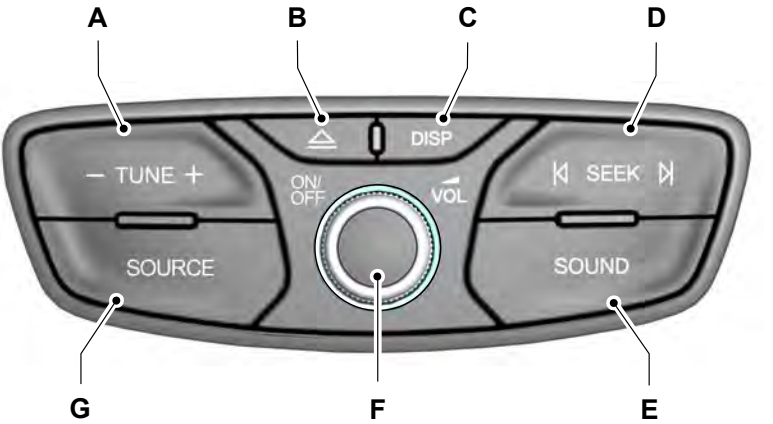

E156662

A **TUNE:** Press these buttons when in radio mode to manually search up or down through the radio frequency band. In SIRIUS mode, press these buttons to find the next or previous available satellite radio station.

B **Eject:** Press the button to eject a CD.

C **DISP:** Press the button to turn the display into idle mode.

D **SEEK:** Press these buttons when you are in radio mode to go to the next station up or down the radio frequency band, or to go to the next or previous track on a CD. In SIRIUS mode, press these buttons to select the next or previous channel. If a specific category is selected (for example Jazz, Rock or News), use these buttons to find the next or previous channel in the selected category.

E **SOUND:** Press the button to adjust the sound settings for bass, treble, middle, balance and fade.

F **On, Off and Volume:** Press the button to switch the audio system on or off. Turn the dial to adjust the volume.

G **SOURCE:** Press the button to access different audio modes, for example AM, FM, Satellite radio and A/V input.

DIGITAL RADIO

Note: *HD Radio broadcasts are not available in all markets.*

HD Radio technology is the digital evolution of analog AM/FM radio. Your system has a special receiver that allows it to receive digital broadcasts (where available) in addition to the analog broadcasts, it already receives. Digital broadcasts provide a better sound quality

2017 Fiesta (CCT) Canada/United States of America, HE8J 19A321 AB enUSA, Edition date: 201607, Second Printing

than analog broadcasts with free, crystal-clear audio and no static or distortion. For more information, and a guide to available stations and programming, please visit www.hdradio.com.

When HD Radio is on and you tune to a station broadcasting HD Radio technology, you may notice the HD Radio logo on your screen. When this logo is available, you may also see Title and Artist fields on-screen.

The multicast indicator appears in FM mode (only) if the current station is broadcasting multiple digital broadcasts. The highlighted numbers signify available digital channels where new or different content is available. HD1 signifies the main programming status and is available in analog and digital broadcasts. Other multicast stations (HD2 through HD7) are only available digitally.

When HD Radio broadcasts are active, you can access the following functions:

- **Scan** allows you to hear a brief sampling of all available stations. This feature still works when HD Radio reception is on, although it does not scan for HD2-HD7 channels. You may see the HD logo appear if the station has a digital broadcast.
- **Memory presets** allow you to save an active channel as a memory preset. Touch and hold a memory preset slot until the sound returns. There is a brief mute while the radio saves the station. Sound returns when finished. When switching to an HD2 or HD3 memory preset, the sound mutes before the digital audio plays, because the system has to reacquire the digital signal.

Note: *As with any saved radio station, you cannot access the saved station if your vehicle is outside the station's reception area.*

HD Radio Reception and Station Troubleshooting

Potential reception issues	
Reception area	If you are listening to a multicast station and you are on the fringe of the reception area, the station may mute due to weak signal strength.
	If you are listening to HD1, the system switches back to the analog broadcast until the digital broadcast is available again. However, if you are listening to any of the possible HD2-HD7 multicast channels, the station mutes and stays muted unless it is able to connect to the digital signal again.
Station blending	When the system first receives a station (aside from HD2-HD7 multicast stations), it first plays the station in the analog version. Once the receiver verifies the station is an HD Radio station, it shifts to the digital version. Depending on the station quality, you may hear a slight sound change when the station changes from analog to digital. Blending is the shift from analog to digital sound or digital back to analog sound.

2017 Fiesta (CCT) Canada/United States of America, HE8J 19A321 AB enUSA, Edition date: 201607, Second Printing

In order to provide the best possible experience, use the contact form to report any station issues found while listening to a station broadcasting with HD Radio technology. Independent entities own and operate each station. These stations are responsible for ensuring all audio streams and data fields are accurate.

Potential station issues		
Issues	**Cause**	**Action**
Echo, stutter, skip or repeat in audio. Increase or decrease in audio volume.	This is poor time alignment by the radio broadcaster.	No action required. This is a broadcast issue.
Sound fading or blending in and out.	The radio is shifting between analog and digital audio.	No action required. The reception issue may clear up as you continue to drive.
There is an audio mute delay when selecting HD2 or HD3, multicast preset or **Direct Tune**.	The digital multicast is not available until the HD Radio broadcast is decoded. Once decoded, the audio is available.	No action required. This is normal behavior. Wait until the audio is available.
Cannot access HD2 or HD3 multicast channel when recalling a preset or from a direct tune.	The previously stored multicast preset or direct tune is not available in your current reception area.	No action required. The station is not available in your current location.
Text information does not match currently playing audio.	Data service issue by the radio broadcaster.	Fill out the station issue form at website listed below.*
There is no text information shown for currently selected frequency.	Data service issue by the radio broadcaster.	Fill out the station issue form at website listed below.*
HD2-HD7 stations not found when **Scan** is pressed.	Pressing **Scan** disables HD2-HD7 channel search.	No action required. This is normal behavior.

* http://www.ibiquity.com/automotive/report_radio_station_experiences

2017 Fiesta (CCT) Canada/United States of America, HE8J 19A321 AB enUSA, Edition date: 201607, Second Printing

HD Radio Technology manufactured under license from iBiquity Digital Corp. U.S. and foreign patents. HD Radio and the HD and HD Radio logos are proprietary trademarks of iBiquity Digital Corp. Ford Motor Company and iBiquity Digital Corp. are not responsible for the content sent using HD Radio technology. Content may be changed, added or deleted at any time at the station owner's discretion.

SATELLITE RADIO

SIRIUS® broadcasts a variety of music, news, sports, weather, traffic and entertainment satellite radio channels. For more information and a complete list of SIRIUS satellite radio channels, visit www.siriusxm.com in the United States, www.siriusxm.ca in Canada, or call SIRIUS at 1-888-539-7474.

Note: *This receiver includes the eCos real-time operating system. eCos is published under the eCos License.*

Satellite Radio Reception Factors

Potential satellite radio reception issues	
Antenna obstructions	For optimal reception performance, keep the antenna clear of snow and ice build-up and keep luggage and other material as far away from the antenna as possible.
Terrain	Hills, mountains, tall buildings, bridges, tunnels, freeway overpasses, parking garages, dense tree foliage and thunderstorms can interfere with your reception.
Station overload	When you pass a ground-based broadcast-repeating tower, a stronger signal may overtake a weaker one and the audio system may mute.
Satellite radio signal interference	Your display may show ACQUIRING . . . to indicate the interference and the audio system may mute.

SIRIUS® Satellite Radio Service

Note: *SIRIUS reserves the unrestricted right to change, rearrange, add or delete programming including canceling, moving or adding particular channels, and its prices, at any time, with or without notice to you. Ford Motor Company shall not be responsible for any such programming changes.*

E142593

2017 Fiesta (CCT) Canada/United States of America, HE8J 19A321 AB enUSA, Edition date: 201607, Second Printing

SIRIUS satellite radio is a subscription-based satellite radio service that broadcasts a variety of music, sports, news, weather, traffic and entertainment programming. Your factory-installed SIRIUS satellite radio system includes hardware and a limited subscription term, which begins on the date of sale or lease of your vehicle. See an authorized dealer for availability.

For more information on extended subscription terms (a service fee is required), the online media player and a complete list of SIRIUS satellite radio channels, and other features, please visit www.siriusxm.com in the United States, www.siriusxm.ca in Canada, or call SIRIUS at 1-888-539-7474.

Satellite Radio Electronic Serial Number (ESN)

You need your ESN to activate, modify or track your satellite radio account. When in satellite radio mode, tune to channel 0.

Troubleshooting

Message	Condition	Action
Acquiring...	Radio requires more than two seconds to produce audio for the selected channel.	No action required. This message should disappear shortly.
Satellite antenna fault SIRIUS system failure	There is an internal module or system failure present.	If this message does not clear shortly, or with an ignition key cycle, your receiver may have a fault. See an authorized dealer for service.
Invalid Channel	The channel is no longer available.	Tune to another channel or choose another preset.
Unsubscribed Channel	Your subscription does not include this channel.	Contact SIRIUS at 1-888-539-7474 to subscribe to the channel, or tune to another channel.
No Signal	The signal is lost from the SIRIUS satellite or SIRIUS tower to your vehicle antenna.	The signal is blocked. When you move into an open area, the signal should return.
Updating...	Update of channel programming in progress.	No action required. The process may take up to three minutes.

2017 Fiesta (CCT) Canada/United States of America, HE8J 19A321 AB enUSA, Edition date: 201607, Second Printing

Message	Condition	Action
Questions? Call 1-888-539-7474	Your satellite service is no longer available.	Contact SIRIUS at 1-888-539-7474 to resolve subscription issues.
None found Check Channel Guide	All the channels in the selected category are either skipped or locked.	Use the channel guide to turn off the Lock or Skip function on that station.
Subscription Updated	SIRIUS has updated the channels available for your vehicle.	No action required.

AUDIO INPUT JACK

WARNING

Driving while distracted can result in loss of vehicle control, crash and injury. We strongly recommend that you use extreme caution when using any device that may take your focus off the road. Your primary responsibility is the safe operation of your vehicle. We recommend against the use of any hand-held device while driving and encourage the use of voice-operated systems when possible. Make sure you are aware of all applicable local laws that may affect the use of electronic devices while driving.

Note: *Store the portable music player in a secure location, such as the center console or the glove box, when your vehicle is moving. The audio extension cable must be long enough for you to safety store the device when your vehicle is moving.*

Note: *For optimum performance when using any auxiliary device set the volume on the device high. This reduces audio interference when charging the device using the vehicle power supply.*

Note: *For safety reasons, do not connect or adjust the settings on your device while your vehicle is moving.*

E149149

The auxiliary input jack allows you to connect and play music from your portable music player through your vehicle speakers. You can use any portable music player designed for use with headphones. Your audio extension cable must have male connectors at each end.

1. Make sure your vehicle is stationary with the audio unit and the portable music player switched off.
2. Plug the extension cable from the device into the audio input jack.
3. Switch on the radio and select either a tuned FM station or a CD.
4. Adjust the volume as desired.
5. Switch on your device and adjust the volume to half the maximum level.

2017 Fiesta (CCT) Canada/United States of America, HE8J 19A321 AB enUSA, Edition date: 201607, Second Printing

6. Press ***AUX*** until ***LINE*** or ***LINE IN*** appears in the display. You should hear music from your device even if it is low.
7. Adjust the volume on your device until it reaches the volume level of the FM station or CD. Do this by switching back and forth between the ***AUX*** and FM or CD controls.

USB PORT (If Equipped)

WARNING

Driving while distracted can result in loss of vehicle control, crash and injury. We strongly recommend that you use extreme caution when using any device that may take your focus off the road. Your primary responsibility is the safe operation of your vehicle. We recommend against the use of any hand-held device while driving and encourage the use of voice-operated systems when possible. Make sure you are aware of all applicable local laws that may affect the use of electronic devices while driving.

E201595

The USB port allows you to plug in media playing devices, memory sticks and charge devices (if supported). See **Using SYNC™ With Your Media Player** (page 304).

MEDIA HUB (If Equipped)

You can locate the media hub inside the center console or on the instrument panel.

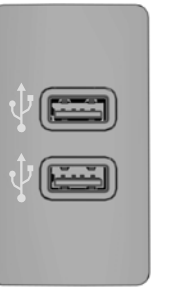

E211463

See your SYNC information.

2017 Fiesta (CCT) Canada/United States of America, HE8J 19A321 AB enUSA, Edition date: 201607, Second Printing

GENERAL INFORMATION

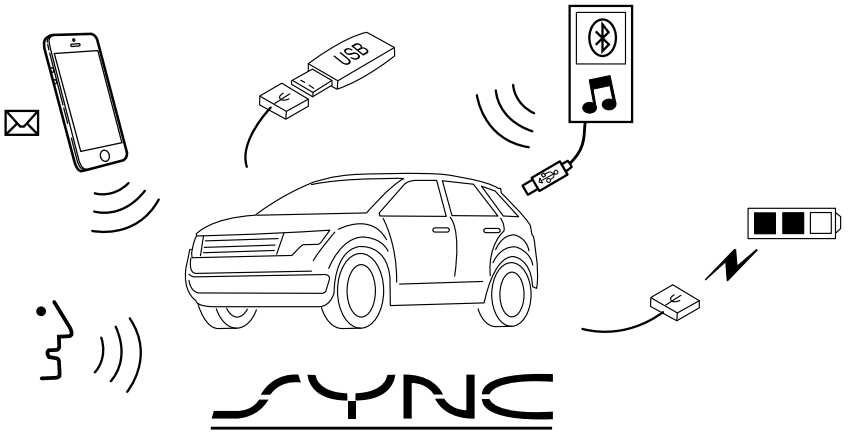

E198355

SYNC is an in-vehicle communications system that works with your Bluetooth-enabled cellular phone and portable media player. This allows you to:

- Make and receive calls.
- Access and play music from your portable music player.
- Use 911 Assist, Vehicle Health Report and SYNC Services (Traffic, Directions & Information).*
- Use applications, such as Stitcher, via SYNC AppLink.**
- Access phonebook contacts and music using voice commands.
- Stream music from your connected phone.
- Text message.
- Use the advanced voice recognition system.
- Charge your USB device (if your device supports this).

*These features are not available in all markets and require activation.

**Available AppLink enabled apps vary by market.

Make sure that you review your device's manual before using it with SYNC.

Support

The SYNC support team is available to help you with any questions you cannot answer on your own.

2017 Fiesta (CCT) Canada/United States of America, HE8J 19A321 AB enUSA, Edition date: 201607, Second Printing

Monday-Saturday, 8:30am-9:00pm EST.

Sunday, 10:30am-7:30pm EST.

In the United States, call 1-800-392-3673.

In Canada, call 1-800-565-3673.

Times are subject to change due to holidays.

SYNC Owner Account

Why do I need a SYNC owner account?

- Required to activate Vehicle Health Report and to view the reports online.
- Required to activate the subscription-based SYNC Services and to personalize your Saved Points and Favorites.
- Essential for keeping up with the latest software downloads available for SYNC.
- Access to customer support for any questions you may have.

Driving Restrictions

For your safety, certain features are speed-dependent and restricted when your vehicle is traveling over 3 mph (5 km/h).

Safety Information

WARNING

Driving while distracted can result in loss of vehicle control, crash and injury. We strongly recommend that you use extreme caution when using any device that may take your focus off the road. Your primary responsibility is the safe operation of your vehicle. We recommend against the use of any hand-held device while driving and encourage the use of voice-operated systems when possible. Make sure you are aware of all applicable local laws that may affect the use of electronic devices while driving.

When using SYNC:

- Do not operate playing devices if the power cords or cables are broken, split or damaged. Place cords and cables out of the way, so they do not interfere with the operation of pedals, seats, compartments or safe driving abilities.
- Do not leave playing devices in your vehicle during extreme conditions as it could cause them damage. See your device's manual for further information.
- Do not attempt to service or repair the system. See an authorized dealer.

Privacy Information

When a cellular phone is connected to SYNC, the system creates a profile within your vehicle that is linked to that cellular phone. This profile is created in order to offer you more cellular features and to operate more efficiently. Among other things, this profile may contain data about your cellular phone book, text messages (read and unread), and call history, including history of calls when your cellular phone was not connected to the system. In addition, if you connect a media device, the system creates and retains an index of supported media content. The system also records a short development log of approximately 10 minutes of all recent system activity. The log profile and other system data may be used to improve the system and help diagnose any problems that may occur.

The cellular profile, media device index, and development log will remain in the vehicle unless you delete them and are generally accessible only in the vehicle when the cellular phone or media player is connected. If you no longer plan to use the system or the vehicle, we recommend you perform a Master Reset to erase all stored information.

2017 Fiesta (CCT) Canada/United States of America, HE8J 19A321 AB enUSA, Edition date: 201607, Second Printing

System data cannot be accessed without special equipment and access to the vehicle's SYNC module. Ford Motor Company and Ford of Canada will not access the system data for any purpose other than as described absent consent, a court order, or where required by law enforcement, other government authorities, or other third parties acting with lawful authority. Other parties may seek to access the information independently of Ford Motor Company and Ford of Canada. For further privacy information, see the sections on 911 Assist, Vehicle Health Report, and Traffic, Directions and Information.

USING VOICE RECOGNITION

This system helps you control many features using voice commands. This allows you to keep your hands on the wheel and focus on what is in front of you.

Helpful Hints

- Make sure the interior of your vehicle is as quiet as possible. Wind noise from open windows and road vibrations may prevent the system from correctly recognizing spoken commands.
- After pressing the voice button, wait until after the tone sounds and Listening appears before saying a command. Any command spoken before this does not register with the system.
- Speak naturally, without long pauses between words.
- At any time, you can interrupt the system while it is speaking by pressing the voice button.

Initiating a Voice Session

Initiate a voice session by pressing the voice button on the steering wheel controls. See **Voice Control** (page 69).

When prompted you can say any of the following:

Voice command	If you want the system to carry out the following
Bluetooth Audio	Stream audio from your phone.
Cancel	Cancel the requested action.
mobile (apps | applications)	Access mobile applications.
Phone	Make calls.
USB [1]	Access the device connected to your USB port.
Vehicle Health (Report)	Run a vehicle health report.

2017 Fiesta (CCT) Canada/United States of America, HE8J 19A321 AB enUSA, Edition date: 201607, Second Printing

Voice command	If you want the system to carry out the following
Voice Settings | Voice Preferences	Adjust the level of voice interaction and feedback.
Help	Hear a list of voice commands available in the current mode.

You can say any of the voice commands that appear within open and close brackets that are separated by |. For example, where (cancel | stop | exit) appears you say; cancel or stop or exit.

You must say any of the voice commands that appear outside of open and close brackets. For example, where mobile (apps | applications) appears, you must say mobile followed by either apps or applications.

You do not need to say words that appear within square brackets. For example, for where (USB [stick] | iPOD | MP3 [player]) appears, you can say USB or USB stick.

Note: *SYNC Services and Vehicle health report are only available in the United States of America.*

System Interaction and Feedback

The system provides feedback through audible tones, prompts, questions and spoken confirmations depending on the situation and the chosen level of interaction (voice settings). You can customize the voice recognition system to provide more or less instruction and feedback.

The default setting is to a higher level of interaction in order to help you learn to use the system. You can change these settings at any time.

Adjusting the Interaction Level

Initiate a voice session by pressing the voice button on the steering wheel controls. See **Voice Control** (page 69).

When prompted say the following:

Voice command	If you want the system to carry out the following
Voice Settings | Voice Preferences	
Followed by either of the following:	
Interaction Mode Standard	Provide more detailed interaction and guidance.
Interaction Mode Advanced	Provide less audible interaction and more tone prompts.

The system defaults to the standard interaction mode.

2017 Fiesta (CCT) Canada/United States of America, HE8J 19A321 AB enUSA, Edition date: 201607, Second Printing

Confirmation prompts are short questions the system asks when it is not sure of your request or when there are multiple possible responses to your request. For example, the system may ask "Phone, is that correct?". If turned off, the system simply makes a best guess as to what you requested and may ask you to confirm settings.

Voice command	If you want the system to carry out the following
Confirmation Prompts Off	Make a best guess from the command; you may still occasionally be asked to confirm settings.
Confirmation Prompts On	Clarify your voice command with a short question.

The system creates candidate lists when it has the same confidence level of several options based on your voice command. When turned on, it may prompt you with as many as four possibilities for clarification.

For example, say "Say 1 after the tone to call John Doe at home. Say 2 after the tone to call Johnny Doe on mobile. Say 3 after the tone to call Jane Doe at home." You could also say "Say 1 after the tone to play John Doe, Say 2 after the tone to play Johnny Doe."

Voice command	If you want the system to carry out the following
Media Candidate Lists Off	Make a best guess from the media candidate list. You may still occasionally be asked questions.
Media Candidate Lists On	Clarify your voice command for media candidates.
Phone Candidate Lists Off	Make a best guess from the phone candidate list. You may still occasionally be asked questions.
Phone Candidate Lists On	Clarify your voice command for phone candidates.

2017 Fiesta (CCT) Canada/United States of America, HE8J 19A321 AB enUSA, Edition date: 201607, Second Printing

USING SYNC™ WITH YOUR PHONE

Hands-free calling is one of the main features of SYNC. While the system supports a variety of features, many are dependent on your cell phone's functionality. At a minimum, most cell phones with Bluetooth wireless technology support the following functions:

- Answering an incoming call.
- Ending a call.
- Using privacy mode.
- Dialing a number.
- Redialing.
- Call waiting notification.
- Caller ID.

Other features, such as text messaging using Bluetooth and automatic phonebook download, are cell phone-dependent features. To check your cell phone's compatibility, see your cell phone's manual and visit www.SYNCMyRide.com, www.SYNCMyRide.ca or www.syncmaroute.ca.

Pairing a Cell Phone for the First Time

Note: *SYNC can support downloading up to approximately 1000 entries per Bluetooth-enabled cell phone.*

Note: *Make sure to switch on the ignition and the radio. Put the transmission in position park (**P**) (automatic transmission) or neutral with the parking brake applied (manual transmission).*

Note: *To scroll through the menus, press the up and down arrows on your audio system.*

Wirelessly pairing your cell phone with SYNC allows you to make and receive hands-free calls.

Press the phone button. When the display indicates there is no cell phone paired, do the following:

Message	Action and Description
NO PHONE	Press the **OK** button.
FIND SYNC	1. Press the **OK** button. 2. Put your cell phone into Bluetooth discovery mode. See your device's manual if necessary. 3. When prompted on your cell phone's display, enter the six-digit PIN provided by SYNC in the radio display. The display indicates when the pairing is successful.

2017 Fiesta (CCT) Canada/United States of America, HE8J 19A321 AB enUSA, Edition date: 201607, Second Printing

Depending on your cell phone's capability and your market, the system may prompt you with questions, such as setting the current cell phone as the primary cell phone (the cell phone SYNC automatically tries to connect with first upon vehicle start-up) and downloading your phonebook.

Pairing Subsequent Cell Phones

Note: *To scroll through the menus, press the up and down arrows on your audio system.*

Note: *Make sure to switch on the ignition and the radio. Put the transmission in position park (**P**) (automatic transmission) or neutral with the parking brake applied (manual transmission).*

Press the phone button, then scroll to:

Message	Action
PHONE SETNGS	Press the **OK** button.
BT DEVICES	Press the **OK** button.
ADD DEVICE	Press the **OK** button. When the following message appears in the display.
FIND SYNC	1. Press the **OK** button. 2. Put your cell phone into Bluetooth discovery mode. See your device's manual if necessary. 3. When prompted on your cell phone's display, enter the six-digit PIN provided by SYNC in the radio display. The display indicates when the pairing is successful.

The system then prompts with questions, such as if you would like to set the current cell phone as the primary cell phone (the cell phone SYNC automatically tries to connect with first upon vehicle start-up) or download your phonebook.

Phone Voice Commands

Press the voice icon and say:

Voice Commands
Phone
You can then say any of the following commands.
Call History Incoming
Call History Missed
Call History Outgoing

Voice Commands
Phonebook ___
Phonebook ___ at Home
Phonebook ___ at Work
Phonebook ___ in Office
Phonebook ___ on Cell

___ is a dynamic listing that should be the name of a contact in your phonebook. For example you could say "Call Mom".

2017 Fiesta (CCT) Canada/United States of America, HE8J 19A321 AB enUSA, Edition date: 201607, Second Printing

You can also say any of the following:

Voice Command
Call ___
Call ___ at Home
Call ___ at Work
Call ___ in Office
Call ___ on Mobile
Call ___ on Other
Dial

None of these commands are available until your cell phone information is completely downloaded using Bluetooth.

___ is a dynamic listing that should be the name of a contact in your phonebook. For example you could say "Call Mom".

The following commands are only available during active calls:

Voice Commands
Go To Privacy
Hold
Join

Phone Menu Commands

To access the phone menu with voice commands, press the voice button and when prompted say:

Voice Command
[Phone] Menu
You can then say any of the following:
[Phone] Connections | [Media] Connections | [Bluetooth] Connections
[Phone] Settings [Message] Notification On
[Phone] Settings [Message] Notification Off
[Phone] Settings [Set] Phone Ringer
[Phone] Settings [Set] Ringer 1
[Phone] Settings [Set] Ringer 2
[Phone] Settings [Set] Ringer 3
[Phone] Settings [Set] Ringer Off
Battery
Phone Name
Signal
Text Message Inbox
Send [New] Text Message

You do not need to say word contained within brackets for the system to understand your command.

Note: *To exit dial mode, press and hold the phone button or press MENU to go to the PHONE menu.*

Phonebook Commands

When you ask SYNC to access content, for example the phonebook name or number, the requested information appears in the display to view.

2017 Fiesta (CCT) Canada/United States of America, HE8J 19A321 AB enUSA, Edition date: 201607, Second Printing

Making a Call

Press the voice button and when prompted say:

Voice Command	Action and Description
Call ___	This command is not available until your cell phone information is completely downloaded using Bluetooth.
Dial	Use to enter a phone number digit by digit.
When the system confirms the number say one of the following commands:	
Dial	To confirm the number and initiate the call.
delete	To erase the last spoken digit. You can also press the left arrow button.
clear	To erase all spoken digits. You can also press and hold the left arrow button.

To end a call, press and hold the red phone button.

Receiving Calls

When receiving a call, you can:

- Answer the call by pressing the phone button.
- Reject the call by pressing and holding the red phone button.
- Ignore the call by doing nothing.

Phone Options during an Active Call

During an active call, you have more menu features that become available, for example putting a call on hold or joining calls. Use the arrow buttons to scroll through the menu options.

Press the MENU button during an active call, then scroll to:

Message	Action and Description
CALL MENU	Press the **OK** button.
Select one of the following:	
PRIVACY	Press the **OK** button to switch a call from an active hands-free environment to your cell phone for a more private conversation.
CALL HOLD	Press the **OK** button to put an active call on hold.
JOIN CALLS	Join two separate calls. SYNC supports a maximum of three callers on a multiparty call or conference call.

2017 Fiesta (CCT) Canada/United States of America, HE8J 19A321 AB enUSA, Edition date: 201607, Second Printing

Message	Action and Description	
	1. Press the phone button. 2. Access the desired contact through SYNC or use voice commands to place the second call. Once actively in the second call, press **MENU**. 3. Scroll to Join Calls, and press the **OK** button. Wait until the following message appears.	
	JOIN CALLS	Press the **OK** button.
ENTER TONES	Enter tones such as numbers for passwords. Scroll until the desired number appears in the display, then press OK; a tone sounds as confirmation. Repeat as necessary.	
PHONEBOOK	To access your phonebook contacts. 1. Press the **OK** button to select, and then scroll through your phonebook contacts. 2. Press the **OK** button again when the desired selection appears in the display. 3. Press the phone button to call the contact.	
CALL HISTORY	To access your call history log. 1. Press the **OK** button to select, then scroll through your call history options (incoming, outgoing or missed). 2. Press the **OK** button when the desired selection appears in the display. 3. Press the phone button to call the selection.	
RETURN	Exit the current menu.	

Accessing Features Through the Phone Menu

The phone menu allows you to redial a number, access your call history and phonebook and sends text messages as well as access cell phone and system settings. You can also access advanced features, for example 911 Assist, Vehicle Health Report and SYNC Services.

2017 Fiesta (CCT) Canada/United States of America, HE8J 19A321 AB enUSA, Edition date: 201607, Second Printing

Press the phone button to enter the Phone Menu, then scroll to:

Message	Action and Description	
PHONE REDIAL	Press the **OK** button to redial the last number called. Press the **OK** button again to confirm.	
PHONE REDIAL	Access any previously dialed, received or missed calls after you connect your Bluetooth-enabled cell phone to SYNC.[1] Press the **OK** button then select one of the following and press the **OK** button again to confirm. INCOMING OUTGOING MISSED The system attempts to automatically re-download your phonebook and call history each time your cell phone connects to SYNC (if the auto download feature is on and your Bluetooth-enabled cell phone supports this feature).	
PHONEBOOK	To browse your phonebook select:	
	BROWSE	Press **OK**. Scroll down or up to the desired name and press **OK**. In addition to the Phonebook entry name, the phone number label (Work, Cell, Home or Other) shows on the display. If there are multiple phone number entries for a particular Phonebook name, you can scroll through the different phone labels at this time. Once you have the desired phone label on the screen press **OK**. The phone number that is stored under the selected label will be shown on the display. Press **OK** to dial this number.
	To search for a contact in your phone book select:	
	SEARCH	Press **OK**. Scroll down until you see the first letter of your phonebook entry. Press **OK**. Scroll down until you see the second letter of your desired phonebook entry. Press **OK**.

2017 Fiesta (CCT) Canada/United States of America, HE8J 19A321 AB enUSA, Edition date: 201607, Second Printing

Message	Action and Description	
		Repeat entering letters to narrow your search. When you are satisfied with your entry press the right arrow key on the bezel. SYNC will jump to the phonebook contact name that matches your entry. Press **OK**. In addition to the Phonebook entry name, the phone number label (Work, Cell, Home or Other) shows on the display. If there are multiple phone number entries for a particular Phonebook name, you can scroll through the different phone labels at this time. Once you have the desired phone label on the screen press **OK**. The phone number that is stored under the selected label will be shown on the display. Press **OK** to dial this number.
TEXT MESSAGE	Press the **OK** button to send, download, read and delete text messages.[1]	
PHONE SETNGS	View your cell phone's status, set ring tones, select your message notification, change phonebook entries and automatically download your cell phone content among other features.[1]	
SYNC Services	Access the SYNC Services portal where you can request various types of information, for example traffic reports and directions.[3]	
911 Assist	Automatically place an emergency call to a 911 operator following a crash.[4]	
Vehicle Health	Create and receive a diagnostic report card on your vehicle.[3]	
APPLICATIONS	Interact with SYNC-capable mobile applications on your smartphone.	

2017 Fiesta (CCT) Canada/United States of America, HE8J 19A321 AB enUSA, Edition date: 201607, Second Printing

Message	Action and Description
SYS SETTINGS	Access Bluetooth Devices menu listings and advanced menu listings.
EXIT MENU	Press the **OK** button to exit the phone menu.

[1] This is a cell phone-dependent feature.

[2] This is a cell phone-dependent and speed-dependent feature.

[3] This is an optional feature and available in the United States only.

[4] This is an optional feature and available in the United States and Canada only.

Text Messaging

Note: *This is a cell phone-dependent feature.*

SYNC allows you to receive, send, download and delete text messages. The system can also read incoming text messages to you so that you do not have to take your eyes off the road.

Receiving a Text Message

Note: *This is a cell phone-dependent feature. Your cell phone must support downloading text messages using Bluetooth to receive incoming text messages.*

Note: *Forwarding a text message is a speed-dependent feature. It is only available when your vehicle is traveling at 3 mph (5 km/h) or less.*

Note: *Only one recipient is allowed per text message.*

When a new text message arrives, an audible tone sounds and the information display indicates you have a new message.

Following the notification you can do any of the following:

Do nothing to have the message go into your text message inbox.

To have SYNC read you the message using voice commands, press the voice button and when prompted say:

Voice Command	Action and Description
Read Message | Read Text Message | Text Message	SYNC will read the most recent text message to you.

To open the test message, press OK to receive and open the text message. Press OK again and SYNC reads your message aloud as you are not able to view the message. You can then also choose whether you'd like to reply or forward the message.

2017 Fiesta (CCT) Canada/United States of America, HE8J 19A321 AB enUSA, Edition date: 201607, Second Printing

Reply or forward the message, press OK and scroll to choose between:

Message	Action and Description
REPLY TO MSG	Press the **OK** button to access and then scroll through the list of pre-defined messages to send.
FORWARD MSG	Press the **OK** button to forward the message to anyone in your Phonebook or Call History. You can also choose enter a number.

Sending, Downloading and Deleting Your Text Messages

Text messaging is a cell phone-dependent feature. If your cell phone is compatible, SYNC allows you to receive, send, download and delete text messages.

Note: *Sending a text message is a speed-dependent feature. It is only available when your vehicle is traveling at 3 mph (5 km/h) or less.*

Note: *You can only have one recipient per text message.*

Press the phone button, then scroll to:

Message	Action and Description
TEXT MESSAGE	Press the **OK** button.
Select one of the following:	
SEND MSG?	Allows you to send a new text message based on a pre-defined set of 15 messages. 1. Press the **OK** button. 2. Scroll to your desired message. 3. Press the **OK** button. 4. Scroll through your phonebook, call history entries or enter a new number. 5. Press the **OK** button to enter the desired contact. 6. Press the **OK** button again when the system asks if you would like to send the message. The system sends each text message with the following signature: This message was sent from my Ford.

2017 Fiesta (CCT) Canada/United States of America, HE8J 19A321 AB enUSA, Edition date: 201607, Second Printing

Message	Action and Description
DOWNLOAD MSG	Allows you to download your unread messages to SYNC. To download the messages, press the **OK** button to select. The display indicates the system is downloading your messages. When downloading is complete, SYNC returns you to the inbox.
DELETE ALL	Allows you to delete current text messages from SYNC. To delete the messages, press the **OK** button to select. The display indicates when it is finished deleting all your text messages. SYNC returns you to the text message menu.
RETURN	Press the **OK** button to exit the current menu.

Accessing Your Phone Settings

These are cell phone-dependent features. Your cell phone settings allow you to access and adjust some features. For example ring tones, text message notification, modify your phonebook and set up automatic download.

Press the phone button, then scroll to:

Message	Action and Description
PHONE SETNGS	Press the **OK** button.
Select one of the following:	
PHONE STATUS	See the provider, name, signal power, battery power and roaming status of your connected cell phone. Press **OK** to select and scroll to view the information. When done, press **OK** again to return to the phone status menu.
SET RINGER	Select which ring tone sounds during an incoming call. You can choose one of the system ring tones or your cell phone ring tones. Press the **OK** button and scroll to hear the available options. You can also choose to use to use your phone's ring tone.
	Press the **OK** button to select the desired ring tone. If your cell phone supports in-band ringing, your cell phone ring plays when you choose the phone ringer option.
MSG NTFY	You have the option of hearing an audible tone to notify you when a text message arrives.

2017 Fiesta (CCT) Canada/United States of America, HE8J 19A321 AB enUSA, Edition date: 201607, Second Printing

Message	Action and Description	
	Press the **OK** button then select one of the following and press the **OK** button again to confirm. MSG NTFY ON MSG NTFY OFF	
MODIFY PHONEBOOK	Modify the contents of your phone book (such as add, delete, download). Press OK to select and scroll between:	
	ADD CONTACTS	Press the **OK** button to add more contacts from your phonebook. Push the desired contact(s) on your cell phone. See your cell phone's manual on how to push contacts.
	DELETE PHONEBOOK	Press **OK** to delete the current phone book and call history. When Delete Phonebook appears, press OK to confirm. SYNC takes you back to the Phone Settings menu.
	DOWNLOAD PHONEBOOK	Press **OK** to select and press OK again when Confirm Download? appears.
AUTODOWNLOAD	Automatically download your phone book each time your phone connects to SYNC. Press OK to select.	
	AUTO ON?	When this message appears, press **OK** to have your phonebook automatically downloaded each time. Select Off to NOT download your phonebook every time your phone connects to SYNC. Your phonebook, call history and text messages can only be accessed when your specific phone is connected to SYNC. *
SPEAK NAMES	When enabled, SYNC speaks the contact name that is displayed on the screen during phonebook browsing.	
RETURN	Exit the current menu.	

* Downloading times are cell phone-dependent and quantity-dependent. When Auto Download is on, it automatically deletes any changes, additions or deletions saved since your last download.

System Settings

This menu provides access to your Bluetooth Devices and Advanced menu features. Use the arrow buttons to scroll through the menu options.

Bluetooth Devices

The Bluetooth Devices menu allows you to add, connect and delete devices, set a cell phone as primary as well as turn your Bluetooth feature on and off.

2017 Fiesta (CCT) Canada/United States of America, HE8J 19A321 AB enUSA, Edition date: 201607, Second Printing

Press the Phone button to enter the Phone Menu, then scroll to:

Message	Action and Description
SYS SETTINGS	Press the **OK** button.
BT DEVICES	Press the **OK** button.
Select one of the following:	
ADD DEVICE	See **Using SYNC™ With Your Phone** (page 281). [1]
CONNECT BT	Connect a previously paired Bluetooth-enabled phone. [2] Press **OK** to select and view a list of previously paired phones. Scroll until the desired device is chosen, then press OK to connect the phone.
SET PRIMARY?	Set a previously paired phone as your primary phone. [3] Press **OK** to select and scroll to select the desired phone. Press OK to confirm.
BT ON/OFF	Turn the Bluetooth feature on and off.[4] Press **OK** and scroll to toggle between On and Off. When the desired selection is chosen, press **OK**. Setting Bluetooth to off disconnects all Bluetooth devices and turns off all Bluetooth features.
DEL DEVICE	Delete a paired cell phone. Press the **OK** button and scroll to select the device. Press **OK** to confirm.
DELETE ALL	Delete all previously paired phones (and all information originally saved with those phones). Press **OK** to select.
RETURN	Exit the current menu.

[1] This is a speed-dependent feature. It is only available when your vehicle is traveling at 3 mph (5 km/h) or less.

[2] You can only connect one device at a time. When another cell phone is connected, the previous one is disconnected.

[3] SYNC attempts to connect with the primary phone at every ignition cycle. When a phone is selected as primary, it appears first in the list and is marked with an asterisk (*).

[4]Turning Bluetooth off disconnects all Bluetooth devices and deactivates all Bluetooth features.

2017 Fiesta (CCT) Canada/United States of America, HE8J 19A321 AB enUSA, Edition date: 201607, Second Printing

Advanced

The Advanced menu allows you to access and set prompts, languages, defaults, perform a master reset, install an application and view system information.

To access the advanced menu, press the phone button to enter the Phone Menu, the scroll to:

Message	Action and Description
SYS SETTINGS	Press **OK**.
ADVANCED	Press **OK**.
Select one of the following:	
PROMPTS	Get help from SYNC by using questions, helpful hints or asking you for a specific action. To turn these prompts on or off: 1. Press the **OK** button to select and scroll to select between On and Off. 2. Press the **OK** button when the desired selection appears in the display. SYNC returns you to the Advanced menu.
LANGUAGES	1. Press **OK** to select and then scroll through the languages. Choose between English, Français and Español. Once selected, all of the radio displays and prompts are in the selected language. 2. Press **OK** when the desired selection appears in the display. If you change the language setting, the display indicates that the system is updating. When complete, SYNC returns you to the Advanced menu.
DEFAULTS	Return to the factory default settings. This selection does not erase your indexed information, for example phonebook, call history, text messages or paired devices. Press the **OK** button to select and then press **OK** again when the following message appears in the display. RESTORE?
MASTER RESET	Completely erase all information stored on SYNC, for example phonebook, call history, text messages and paired devices, and return the system to the factory default settings. Press **OK** to select. The display indicates when complete. SYNC returns you to the Advanced menu.
SYNC REBOOT	Press **OK** to select.

2017 Fiesta (CCT) Canada/United States of America, HE8J 19A321 AB enUSA, Edition date: 201607, Second Printing

Message	Action and Description	
	CONFIRM REBOOT?	Press **OK** to select. You only need to press the OK button once. SYNC will be unresponsive for 2-4 minutes while it is rebooting. Wait 2-4 minutes before attempting to execute a SYNC command
INSTALL APP	Install applications you have downloaded. Press the **OK** button and scroll to select. Press the **OK** button to confirm.	
SYSTEM INFO	Access the Auto Version number as well as the FDN number. Press the **OK** button to select.	
RETURN	Exit the current menu.	

SYNC™ APPLICATIONS AND SERVICES (If Equipped)

In order for the following features to work, your cell phone must be compatible with SYNC. To check your phone's compatibility, visit www.SYNCMyRide.com, www.SYNCMyRide.ca or www.syncmaroute.ca.

- SYNC Services*: Provides access to traffic, directions and information such as travel, horoscopes, stock prices and more.
- 911 Assist: Can alert 911 in the event of an emergency.
- Vehicle Health Report*: Provides a diagnostic and maintenance report card of your vehicle.

*This is an optional feature and available in the United States only.

911 Assist (If Equipped)

WARNINGS

Unless the 911 Assist setting is set on before a crash, the system will not dial for help which could delay response time, potentially increasing the risk of serious injury or death after a crash.

Do not wait for 911 Assist to make an emergency call if you can do it yourself. Dial emergency services immediately to avoid delayed response time which could increase the risk of serious injury or death after a crash. If you do not hear 911 Assist within five seconds of the crash, the system or phone may be damaged or non-functional.

Always place your phone in a secure location in your vehicle so it does not become a projectile or get damaged in a crash. Failure to do so may cause serious injury to someone or damage the phone which could prevent 911 Assist from working properly.

Note: *The SYNC 911 Assist feature must be set on before the incident.*

2017 Fiesta (CCT) Canada/United States of America, HE8J 19A321 AB enUSA, Edition date: 201607, Second Printing

Note: *Before setting this feature on, make sure that you read the 911 Assist Privacy Notice later in this section for important information.*

Note: *If any user turns 911 Assist on or off, that setting applies for all paired phones. If 911 Assist is turned off, either a voice message plays or a display message (or icon) comes on (or both) when your vehicle is started after a previously paired phone connects.*

Note: *Every phone operates differently. While SYNC 911 Assist works with most cellular phones, some may have trouble using this feature.*

If a crash deploys an airbag (excluding knee airbags and rear inflatable safety belts [if equipped]) or activates the fuel pump shut-off, your SYNC-equipped vehicle may be able to contact emergency services by dialing 911 through a paired and connected Bluetooth-enabled phone. You can learn more about the 911 Assist feature, visit www.SYNCMyRide.com, www.SYNCMyRide.ca or www.syncmaroute.ca.

See **Supplementary Restraints System** (page 37). Important information about airbag deployment is in this chapter.

See **Roadside Emergencies** (page 160). Important information about the fuel pump shut-off is in this chapter.

Switching 911 Assist On or Off

Press the phone button to enter the phone menu and scroll to:

Message	Action and Description
911 Assist	Press the **OK** button to confirm and enter the 911 Assist menu.
On Off	Press the **OK** button when the desired option appears in the radio display.

Off selections include:

Message	Action and Description
Off with reminder:	Provides a display and voice reminder at phone connection at vehicle start.
Off without reminder:	Provides a display reminder only without a voice reminder at phone connection.

To make sure that 911 Assist works correctly:

- SYNC must be powered and working properly at the time of the incident and throughout feature activation and use.
- The 911 Assist feature must be set on before the incident.
- You must pair and connect a Bluetooth-enabled and compatible cell phone to SYNC.
- A connected Bluetooth-enabled phone must have the ability to make and maintain an outgoing call at the time of the incident.

2017 Fiesta (CCT) Canada/United States of America, HE8J 19A321 AB enUSA, Edition date: 201607, Second Printing

- A connected Bluetooth-enabled phone must have adequate network coverage, battery power and signal strength.
- The vehicle must have battery power and be located in the U.S., Canada or in a territory in which 911 is the emergency number.

In the Event of a Crash

Not all crashes will deploy an airbag or activate the fuel pump shut-off (the triggers for 911 Assist). If a connected cell phone sustains damage or loses its connection to SYNC during a crash, SYNC will search for and try to connect to a previously paired cell phone; SYNC will then attempt to call the emergency services.

Before making the call:

- SYNC provides a short window of time (about 10 seconds) to cancel the call. If you fail to cancel the call, SYNC attempts to dial 911.
- SYNC says the following, or a similar message: "SYNC will attempt to call 911, to cancel the call, press Cancel on your screen or press and hold the phone button on your steering wheel."

If you do not cancel the call, and SYNC makes a successful call, a pre-recorded message plays for the 911 operator, and then the occupant(s) in your vehicle is able to talk with the operator. Be prepared to provide your name, phone number and location immediately, because not all 911 systems are capable of receiving this information electronically.

911 Assist May Not Work If

- Your cellular phone or 911 Assist hardware sustains damage in a crash.
- The vehicle's battery or the SYNC system has no power.
- The phone(s) thrown from your vehicle are the ones paired and connected to the system.

911 Assist Privacy Notice

When you turn on 911 Assist, it may disclose to emergency services that your vehicle has been in a crash involving the deployment of an airbag or activation of the fuel pump shut-off. Certain versions or updates to 911 Assist may also be capable of electronically or verbally disclosing to 911 operators your vehicle location or other details about your vehicle or crash to assist 911 operators to provide the most appropriate emergency services. If you do not want to disclose this information, do not turn the feature on.

Vehicle Health Report (If Equipped, United States Only)

WARNING

Always follow scheduled maintenance instructions, regularly inspect your vehicle, and seek repair for any damage or problem you suspect. Vehicle Health Report supplements, but cannot replace, normal maintenance and vehicle inspection. Vehicle Health Report only monitors certain systems electronically monitored by your vehicle and will not monitor or report the status of any other system, (such as brake lining wear). Failure to perform scheduled maintenance and regularly inspect your vehicle may result in vehicle damage and serious injury.

Note: *This feature is only available in the United States.*

2017 Fiesta (CCT) Canada/United States of America, HE8J 19A321 AB enUSA, Edition date: 201607, Second Printing

Note: *Your Vehicle Health Report feature requires activation before use. Visit www.SYNCMyRide.com to register. There is no fee or subscription associated with Vehicle Health Report, but you must register to use this feature.*

Note: *This feature may not function properly if you have enabled caller ID blocking on your cellular phone. Before running a report, review the Vehicle Health Report Privacy Notice.*

Note: *In order to allow a break-in period for your vehicle, you may not be able to create a Vehicle Health Report until your vehicle odometer has reached 200 miles.*

Note: *Cellular phone and SMS charges may apply when making a report.*

Register for Vehicle Health Report and set your report preferences at www.SYNCMyRide.com. After registering, you can request a Vehicle Health Report (inside your vehicle). Return to your account at www.SYNCMyRide.com to view your report. You can also choose for SYNC to remind you automatically to run reports at specific mileage intervals.

The system allows you to check your vehicle's overall health in the form of a diagnostic report card. The Vehicle Health Report contains valuable information, for example:

- Vehicle diagnostic information
- Scheduled maintenance
- Open recalls and Field Service Actions
- Items noted during vehicle inspections by an authorized dealer that still need servicing.

You can run a vehicle health report after your vehicle has been running a minimum of 60 seconds. Choose one of the following options.

To use voice commands, press the voice button and when prompted say:

Voice command	Action and Description
Vehicle Health (Report)	The system will run a vehicle health report of your vehicle's diagnostic systems and send the results to Ford where it combines with scheduled maintenance information, open recalls, other field service actions and vehicle inspection items that still need servicing by an authorized dealer.

To use the screen, press the phone button, then scroll to:

Message	Action and Description
Vehicle Health	Press the **OK** button.
Select one of the following:	
Auto On?	Press the **OK** button and select on or off.

2017 Fiesta (CCT) Canada/United States of America, HE8J 19A321 AB enUSA, Edition date: 201607, Second Printing

Message	Action and Description
	Select On to have SYNC automatically prompt you to run a health report at certain mileage intervals.*
Report Interval	Scroll to select between 5000, 7500 or 10000-mile intervals. Select your desired option and press the **OK** button.
Run Report	Press the **OK** button for SYNC to run a health report of your vehicle's diagnostic systems and send the results to Ford where it combines with scheduled maintenance information, open recalls, other field service actions and vehicle inspection items that still need servicing by an authorized dealer.
Return	Exit the current menu.

*You must first turn this feature on before you can select the desired mileage interval.

Vehicle Health Report Privacy Notice

When you create a Vehicle Health Report, Ford Motor Company may collect your cellular phone number (to process your report request) and diagnostic information about your vehicle. Certain versions or updates to Vehicle Health Report may also collect more vehicle information. Ford may use your vehicle information it collects for any purpose. If you do not want to disclose your cellular phone number or vehicle information, do not run the feature or set up your Vehicle Health Report profile at www.SYNCMyRide.com. See www.SYNCMyRide.com (Vehicle Health Report Terms and Conditions, and Privacy Statement) for more information.

SYNC Services: Traffic, Directions & Information (TDI) (If Equipped, United States Only)

Note: *SYNC Services varies by trim level and model year and may require a subscription. Traffic alerts and turn-by-turn directions available in select markets. Message and data rates may apply. Ford Motor Company reserves the right to change or discontinue this product service at any time without prior notification or incurring any future obligation.*

Note: *SYNC Services requires activation before use. Visit www.SYNCMyRide.com to register and check your eligibility for complimentary services. Standard phone and message rates may apply. Subscription may be required. You must also have the active SYNC Services Bluetooth-enabled cellular phone paired and connected to the system in order to connect to, and use, SYNC Services. See* ***Using SYNC™ With Your Phone*** *(page 281).*

Note: *This feature does not function properly if you have enabled caller ID blocking on your cellular phone. Make sure your cellular phone is not blocking caller ID before using SYNC Services.*

2017 Fiesta (CCT) Canada/United States of America, HE8J 19A321 AB enUSA, Edition date: 201607, Second Printing

Note: *The driver is ultimately responsible for the safe operation of the vehicle, and therefore, must evaluate whether it is safe to follow the suggested directions. Any navigation features provided are only an aid. Make your driving decisions based on your observations of local conditions and existing traffic regulations. Do not follow the route suggestions if doing so would result in an unsafe or illegal maneuver, place you in an unsafe situation, or if you would be directed into an area that you consider unsafe. Maps used by this system may be inaccurate because of errors, changes in roads, traffic conditions or driving conditions.*

Note: *When you connect, the service uses GPS technology and advanced vehicle sensors to collect your vehicle's current location, travel direction and speed to help provide you with the directions, traffic reports, or business searches you request. Further, to provide the services you request, for continuous improvement, the service may collect and record call details and voice communications. For more information, see SYNC Services Terms and Conditions at www.SYNCMyRide.com. If you do not want Ford or its service providers to collect your vehicle travel information or other information identified in the Terms and Conditions, do not subscribe or use the service.*

SYNC Services uses advanced vehicle sensors, integrated GPS technology and comprehensive map and traffic data, to give you personalized traffic reports, precise turn-by-turn directions, business search, news, sports, weather and more. For a complete list of services, or to learn more, please visit www.SYNCMyRide.com.

Connecting to SYNC Services Using Voice Commands

Press the voice button and when prompted say:

Voice command	Action and Description
Services	This initiates an outgoing call to SYNC Services using your paired and connected Bluetooth-enabled cellular phone. Once you connect to the service, follow the voice prompts to request the desired service, for example traffic or directions.
Once you are connected to SYNC Services, you can also say the following:	
(what are my (options | choices) | what can I say | [available] commands)	Receive a list of available services from which to choose.

2017 Fiesta (CCT) Canada/United States of America, HE8J 19A321 AB enUSA, Edition date: 201607, Second Printing

Voice command	Action and Description
Services	To return to the Services main menu.
help	Receive system help.

You can say any of the voice commands that appear within open and close brackets that are separated by |. For example, where (options | choices) appears you say either; options or choices.

You must say any of the voice commands that appear outside of open and close brackets. For example, where; what are my (options | choices) appears, you must say; what are my, followed by either, options or choices.

You do not need to say words that appear within square brackets. For example, for where (what can I say [available] commands) appears, you can say, what can I say commands.

Connecting to SYNC Services Using the Phone Menu

Press the phone button, then scroll to:

Message	Action and Description
SYNC Apps	Press the **OK** button.
Services	1. Press the **OK** button. The display indicates the system is connecting. 2. Press the **OK** button again. SYNC initiates the call to the Services portal. 3. Once you connect to the service, follow the prompts to request the desired service, for example traffic or directions.

2017 Fiesta (CCT) Canada/United States of America, HE8J 19A321 AB enUSA, Edition date: 201607, Second Printing

Receiving Turn-by-Turn Directions

When connected to SYNC Services, press the voice button and when prompted say:

Voice command	Action and Description
Directions	To receive directions to a location. Once you select your destination, the system uploads your current vehicle location, calculates a route based on current traffic conditions and sends it back to your vehicle. After the route download is complete, the phone call automatically ends. You then receive audible and visual driving instructions as you travel toward your destination.
Business search	To find a business or type of business. Select your destination, the system uploads your current vehicle location, calculates a route based on current traffic conditions and sends it back to your vehicle. After the route download is complete, the phone call automatically ends. You then receive audible and visual driving instructions as you travel toward your destination.
You can also say the following:	
Search near me	To find the closest business or type of business to your location, within business search.
Operator	If you need further assistance in finding a location at any time within a Directions or Business search and need to speak with a live operator. The live operator can assist you by searching for businesses by name or by category, residential addresses by street address or by name or specific street intersections. The system may prompt you to speak with an operator when it has difficulty matching your voice request. Operator Assist is a feature of your SYNC Services subscription. For more information on Operator Assist, visit www.SYNCMyRide.com/support.
Yes *	If you miss a turn, SYNC automatically asks if you want the route updated. Say yes when prompted and the system sends a new route to your vehicle.

* During an active route.

2017 Fiesta (CCT) Canada/United States of America, HE8J 19A321 AB enUSA, Edition date: 201607, Second Printing

Disconnecting from SYNC Services

To disconnect from SYNC services, say:

Voice command	Action and Description
Goodbye	From the SYNC Services main menu, or press and hold the phone button on the steering wheel.

SYNC Services quick tips

SYNC Services quick tips	
Personalizing	You can personalize your Services feature to provide quicker access to your most used or favorite information. You can save address points, for example work or home. You can also save favorite information like sports teams or a news category. You can learn more about personalization by logging onto www.SYNCMyRide.com.
Push to interrupt	Press the voice button at any time while connected to SYNC Services to interrupt a voice prompt or an audio clip and say your voice command.
Portable	Your subscription is associated with your Bluetooth-enabled cellular phone number, not your VIN (Vehicle Identification Number). You can pair and connect your phone to any vehicle equipped with SYNC Services and continue enjoying your personalized services. You can even access your account outside your vehicle. Just use the number on your phone's call history. Traffic and Directions features do not function properly but information services and the 411 connect and text message features are available.

SYNC™ APPLINK™

SYNC Mobile Apps

Note: *You must pair and connect your smartphone to SYNC to access AppLink.*

Note: *iPhone users need to connect the phone to the USB port in order to start the application.*

Note: *The AppLink feature is not available if your vehicle is equipped with the MyFord Touch system.*

Note: *Depending on your display type, you can access AppLink from the media menu, the phone menu, or by using voice commands. Once an app is running through AppLink, you can control main features of the app through voice commands and steering wheel controls.*

2017 Fiesta (CCT) Canada/United States of America, HE8J 19A321 AB enUSA, Edition date: 201607, Second Printing

To Access Using the Phone Menu

Press the phone button to access the SYNC phone menu on-screen. You can then scroll to:

Menu item	
Mobile Apps	Press **OK** to access a list of available applications. Scroll through the list of available applications and press OK to select a particular app. Once an app is running through SYNC, you can access an app's menu by pressing the **MENU** button to first access the SYNC menu.

Scroll until the app name followed by "Menu", is displayed (such as, sticher Menu), then press **OK**. From here, you can access an application's features, such as Thumbs up and Thumbs down.

For more information, please visit:

Website
www.SYNCMyRide.com

To Access Using the Media Menu

Press the **AUX** button on the center console.

Press the Menu button to the SYNC menu and scroll to:

Menu item	Action and description
SYNC-Media	Press the **OK** button.
Mobile Apps	Press the **OK** button and scroll through the list of available applications and select your desired app.

Scroll until the app name followed by "Menu", is displayed (such as, Stitcher Menu), then press **OK**. From here, you can access an application's features, such as Thumbs up and Thumbs down.

For more information, please visit:

Website
www.SYNCMyRide.com

2017 Fiesta (CCT) Canada/United States of America, HE8J 19A321 AB enUSA, Edition date: 201607, Second Printing

To Access Using Voice Commands

Press the voice button and when prompted say:

Voice command	Action and description
Mobile Apps	Say the name of the application after the tone. The app should start. While an app is running through SYNC, you can press the voice button and speak commands specific to the app, for example, "Playlist Road Trip".
You can also say the following:	
The name of an app (such as Stitcher) followed by "help".	To discover the available voice commands.

USING SYNC™ WITH YOUR MEDIA PLAYER

You can access and play music from your digital music player over your vehicle's speaker system using the system's media menu or voice commands. You can also sort and play your music by specific categories, for example artist and album.

Note: *The system is capable of indexing up to 6,000 songs.*

SYNC is capable of hosting nearly any digital media player including: iPod®, Zune™, plays from device players, and most USB drives. SYNC also supports the following audio formats MP3, WMA, WAV and ACC.

Connecting Your Digital Media Player to the USB Port

Note: *If your digital media player has a power switch, make sure you switch it on before plugging it in.*

To Connect Using Voice Commands

Plug the device into the USB port. See **USB Port** (page 275).

Press the voice button and when prompted say:

Voice command	Action and Description
USB [1]	You can now play music by saying any of the appropriate voice commands. See Media voice commands.

You do not need to say words that appear within square brackets. For example, for where USB[1]appears, you can say USB or USB one.

2017 Fiesta (CCT) Canada/United States of America, HE8J 19A321 AB enUSA, Edition date: 201607, Second Printing

To Connect Using the System Menu

Plug the device into the USB port. See **USB Port** (page 275).

Press the **AUX** button, then the **Menu** button to enter the Media Menu.

You can then scroll to:

Message	Action and Description
SELECT SRC	Press the **OK** button.
SYNC USB	Press the **OK** button. Depending on how many digital media files are on your connected device, the following message may appear in the radio display. Indexing...
When indexing is complete, the screen returns to the Play menu. You can then select one of the following:	
PLAY ALL	
ARTISTS	
ALBUMS	
GENRES	
PLAYLISTS	
TRACKS	
EXPLORE USB	
SIMILARMUSIC	
RETURN	Exit the current menu.

What's Playing?

When a track is playing, you can ask the system to tell you what is currently playing.

2017 Fiesta (CCT) Canada/United States of America, HE8J 19A321 AB enUSA, Edition date: 201607, Second Printing

Press the voice button and when prompted say:

Voice command	Action and Description
Whats This? | Whats Playing?	The system reads the metadata tags of the playing track, and if the metadata tags are populated, the system will tell you what track is playing.

You can say any of the voice commands that appear within open and close brackets that are separated by \|. For example, where; (what's \| what is) appears you say; what's or what is.

You must say any of the voice commands that appear outside of open and close brackets. For example, where text shows: (what's \| what is) playing, you must say; "what's playing" or "what is playing".

Media Voice Commands

Press the voice button and when prompted say any of the following:

Voice command	
USB [1]	
You can then say any of the following	
[Phone] Connections | [Media] Connections | [Bluetooth] Connections	
Pause	
Play	
Play All	
Play Artist ___	1,2
Play Album ___	1,2
Play Genre ___	1,2
[Play] Next Folder	3
[Play] Next Track | [Play] Next Song	
Play Playlist ___	1,2
[Play] Previous Folder	3

Voice command		
[Play] Previous Track | [Play] Previous Song		
[Play] Next Track | [Play] Next Song		1,2
Repeat [On]		
Repeat Off		
Shuffle [On]		
Shuffle Off		
Search Album ___		1,2
Search Artist ___		1,2
Search Genre ___	The system searches all the data from your indexed music and, if available, begins to play the chosen type of music. You can only play genres of music which are present in the GENRE metadata tags that you have on your digital media player.	1,2

2017 Fiesta (CCT) Canada/United States of America, HE8J 19A321 AB enUSA, Edition date: 201607, Second Printing

Voice command		
Search Track ___ | Search Song ___	The system searches for a specific artist/track/album from the music indexed through the USB port.	1,2
Refine album ___	This allows you to make your previous command more specific. By using this command you can filter though a previous selection, such as an artist to play only specific album.	1,2
Similar Music	The system compiles a playlist and then plays similar music to what is currently playing from the USB port using indexed metadata information.	
Autoplay Off		
Autoplay [on]	Turn autoplay on to listen to music processed during indexing. Turn autoplay off to allow the indexing process to finish before the system plays any of your music.	

[1] ___ is a dynamic listing, meaning that it could be the name of anything, such as a group, artist or song. For example you could say "Play artist The Beatles".

[2] This voice command is not available until indexing is complete.

[3] This voice command is only available in folder mode.

Bluetooth Audio Command Guide

Press the voice button and say:

Voice command
Bluetooth Audio
You can then say any of the following:
[Phone] Connections | [Media] Connections | [Bluetooth] Connections
Pause
Play
[Play] Next Track | [Play] Next Song
[Play] Previous Track | [Play] Previous Song

Media Menu Features

The media menu allows you to select your media source, how to play your music, for example by artist, genre, shuffle or repeat, and to add, connect or delete devices.

Press the **AUX** button, then the **Menu** button to enter the Media Menu.

2017 Fiesta (CCT) Canada/United States of America, HE8J 19A321 AB enUSA, Edition date: 201607, Second Printing

You can then scroll to:

Message		Action and Description
PLAY MENU		Play your music by artist, album, genre, playlists, tracks, similar music or to simply, play all. You can also choose to Explore USB to view the supported digital music files on your playing device. See Play Menu later in this section for more information.
Select one of the following:		
SELECT SRC	SYNC USB	Press the **OK** button to access music plugged into your USB port. You can also plug in devices to charge them (if supported by your device). Once connected, the system indexes any readable media files.[1]
	SYNC BT	Press the **OK** button. This is a phone-dependent feature that allows you to stream music playing on your Bluetooth-enabled phone. If supported by your device, you can press seek to play the previous or next track.
	SYNC LINE IN (If Equipped)	Press the **OK** button to select and play music from your portable music player over your vehicle's speakers.[2]
MEDIA SETTIN	Choose to shuffle or repeat your music and select your Auto-play settings. Once you turn these selections on, they remain on until you turn them off. Press **SEEK** to play the previous or next track.[3]	
	SHUFFLE	Press the **OK** button to shuffle available media files in the current playlist. To shuffle all media tracks, you must select Play All in the play menu and then select Shuffle.
	REPEAT	Press the **OK** button to repeat any song.
	AUTOPLAY	Press the **OK** button to turn autoplay on to listen to music processed during indexing. Turn autoplay off to allow the indexing process to finish before the system plays any of your music.[4]

2017 Fiesta (CCT) Canada/United States of America, HE8J 19A321 AB enUSA, Edition date: 201607, Second Printing

Message	Action and Description
APPLICATIONS	Interact with SYNC-capable mobile applications on your smartphone.
SYS SETTINGS	Access available Bluetooth Device menu listings as well as Advanced menu listings.
EXIT MENU	Press **OK** to exit the media menu.

[1]The time required to complete this depends on the size of the media the system needs to index. If autoplay is on, you can listen to media processed during indexing. If autoplay is off, you cannot listen to music until the system finishes indexing media. SYNC is capable of indexing thousands of average size media and notifies you if it reaches the maximum indexing file size.

[2]If you have already connected a device to the USB port, you cannot access the line in feature. Some digital media players require both USB and line in ports to stream data and music separately.

[3]Some digital media players require both USB and line in ports to stream data and music separately.

[4]Indexing times can vary from device to device and with regard to the number of songs the system needs to process.

Accessing Your Play Menu

This menu allows you to select and play your media by artist, album, genre, playlist, track, similar music or even to explore what is on your USB device.

Make sure that your device is plugged into the USB port and is turned on.

Press the **AUX** button, then the **Menu** button to enter the Media Menu.

You can then scroll to select:

Message	Action and Description
PLAY MENU	Press the **OK** button.
If there are no media files to access, the display indicates there is no media. If there are media files, you have the following options:	
PLAY ALL	Press the **OK** button. The first track title appears in the display. Play all indexed media (tracks) from your playing device in flat file mode, one at a time in numerical order.

2017 Fiesta (CCT) Canada/United States of America, HE8J 19A321 AB enUSA, Edition date: 201607, Second Printing

Message	Action and Description
ARTISTS	Sort all indexed media by artist. Once selected, the system lists and then plays all artists and tracks alphabetically. If there are fewer than 255 indexed artists, the system lists them alphabetically in flat file mode. If there are more than 255, the system categorizes them alphabetically. 1. Press the **OK** button. You can select to play all artists or any indexed artist. 2. Scroll to choose the desired artist. Press the **OK** button.
ALBUMS	Sort all indexed media by albums. If there are fewer than 255 indexed albums, the system lists them alphabetically in flat file mode. If there are more than 255, the system categorizes them alphabetically. 1. Press the **OK** button. You can enter the album menu and select from playing all albums or from any individual indexed album. 2. Scroll to choose the desired album. Press the **OK** button.
GENRES	Sort indexed music by genre (category) type. SYNC lists the genres alphabetically in flat file mode. If there are more than 255, the system categorizes them alphabetically. 1. Press the **OK** button. 2. Scroll to select the desired genre. Press the **OK** button.
PLAYLISTS	Access your playlists from formats ASX, M3U, WPL or MTP. The system lists your playlists alphabetically in flat file mode. If there are more than 255, the system categorizes them alphabetically. 1. Press the **OK** button. 2. Scroll to select the desired playlist. Press the **OK** button.
TRACKS	Search for and play a specific indexed track. SYNC lists your tracks alphabetically in flat file mode. If there are more than 255, the system categorizes them alphabetically. 1. Press the **OK** button. 2. Scroll to select the desired track. Press the **OK** button.

2017 Fiesta (CCT) Canada/United States of America, HE8J 19A321 AB enUSA, Edition date: 201607, Second Printing

Message	Action and Description
EXPLORE USB	Explore all supported digital media on your media device connected to the USB port. You can only view media content which is compatible with SYNC; other files saved are not visible. 1. Press the **OK** button. 2. Scroll to explore indexed media on your flash drive.
SIMILARMUSIC	Play music similar to what is currently playing from the USB port. The system uses the metadata information of each song to compile a playlist for you.* 1. Press the **OK** button. 2. The system creates a new list of similar songs and begins playing. This feature does not include tracks with incomplete metadata information. Press the **OK** button.
RETURN	Exit the current menu.

*With certain playing devices, if your metadata tags are not populated, the tracks are not available in voice recognition, play menu or similar music. However, if you place these tracks onto your playing device in "Mass Storage Device Mode", they are available in voice recognition, play menu browsing and similar music. The system places Unknown items into any unpopulated metadata tag.

System Settings

System settings provide access to your Bluetooth Devices and Advanced menu features.

Bluetooth Devices

The Bluetooth Devices menu allows you to enable, disable, add, connect and delete a Bluetooth device.

Press the **AUX** button, then the **Menu** button to enter the Media Menu.

You can then scroll to:

Message	Action and Description
SYS SETTINGS	Press the **OK** button.
BT DEVICES	Press the **OK** button.
You can then select one of the following:	
ADD DEVICE	Pair more devices to the system.*

2017 Fiesta (CCT) Canada/United States of America, HE8J 19A321 AB enUSA, Edition date: 201607, Second Printing

Message	Action and Description
	1. Press the **OK** button. When find SYNC appears in the display, press the **OK** button again. 2. Follow the directions in your phone's manual to put your phone into discovery mode. A six-digit PIN appears in the display. 3. When prompted on your phone's six-digit display, enter the PIN.
Connect BT	Connect a previously paired Bluetooth-enabled phone. 1. Press **OK** to select and view a list of devices. 2. Scroll until the desired device is chosen and press **OK** to connect the device.
BT ON/OFF	Turn the Bluetooth feature on and off.** 1. Press the **OK** button and scroll to toggle between on and off. 2. Make a selection and press the **OK** button.
DEL DEVICE	Delete a paired media device. 1. Press the **OK** button and scroll to select the device. 2. Press the **OK** button to confirm.
DELETE ALL	Delete all previously paired devices. 1. Press the **OK** button. 2. Press the **OK** button to confirm.
RETURN	Exit the current menu.

*This is a speed-dependent feature. It is only available when your vehicle is traveling at 3 mph (5 km/h) or less.

**Setting Bluetooth to off disconnects all Bluetooth devices and turns off all Bluetooth features.

Advanced

The Advanced menu allows you to access and set prompts, languages, defaults and perform a master reset.

Press the **AUX** button, then the **Menu** button to enter the Media Menu.

2017 Fiesta (CCT) Canada/United States of America, HE8J 19A321 AB enUSA, Edition date: 201607, Second Printing

You can then scroll to:

Message	Action and Description
SYS SETTINGS	Press the **OK** button.
ADVANCED	Press the **OK** button.
You can then select one of the following:	
PROMPTS	Have SYNC guide you by asking questions, helpful hints or ask you for a specific action. 1. Press the **OK** button and scroll to toggle between on and off. 2. Make a selection and press the **OK** button. SYNC takes you back to the Advanced menu.
LANGUAGES	Choose from the available languages. The displays and prompts are in the selected language. 1. Press the **OK** button and scroll through the available languages. 2. Press the **OK** button when the desired language appears in the display. 3. If you change the language setting, the display indicates that the system is updating. When complete, SYNC takes you back to the Advanced menu.
DEFAULTS	Return to the factory default settings. This selection does not erase your indexed information, for example phonebook, call history, text messages and paired devices. 1. Press the **OK** button. 2. Press the **OK** button. When restore defaults appears in the display, press the **OK** button again to confirm.
MASTER RESET	Completely erase all information stored on SYNC. All phonebook, call history, text messages and all paired devices will be deleted and the system will return to the factory default settings.
INSTALL APP	Download available software applications through the USB port.
RETURN	Exit the current menu.

2017 Fiesta (CCT) Canada/United States of America, HE8J 19A321 AB enUSA, Edition date: 201607, Second Printing

SYNC™ TROUBLESHOOTING

Your SYNC system is easy to use. However, should questions arise, see the tables below.

Use the website at any time to check your phone's compatibility, register your account and set preferences as well as access a customer representative via an online chat (during certain hours). Visit www.SYNCMyRide.com, www.SYNCMyRide.ca or www.syncmaroute.ca for more information.

Phone issues		
Issue	**Possible cause(s)**	**Possible solution(s)**
There is excessive background noise during a phone call.	The audio control settings on your phone may be affecting SYNC performance.	Review your phone's manual about audio adjustments.
During a call, I can hear the other person but they cannot hear me.	This may be a possible phone malfunction.	Try turning off the device, resetting the device, removing the device's battery, then trying again.
SYNC is not able to download my phonebook.	This is a phone-dependent feature. This may be a possible phone malfunction.	Go to the website to review your phone's compatibility. Try turning off the device, resetting the device or removing the device's battery, then trying again. Try pushing your phonebook contacts to SYNC by using the Add Contacts feature. Use the SYNCmyphone feature available on the website.
The system says Phonebook Downloaded but the phonebook in SYNC is empty or missing contacts.	This may be a limitation on your phone's capability.	Try pushing your phonebook contacts to SYNC by using the Add Contacts feature. If the missing contacts are stored on your SIM card, try moving them to the device memory. Remove any pictures or special ring tones associated with the missing contact.

2017 Fiesta (CCT) Canada/United States of America, HE8J 19A321 AB enUSA, Edition date: 201607, Second Printing

Phone issues		
Issue	**Possible cause(s)**	**Possible solution(s)**
		Depending upon your phone, you may have to grant SYNC permission to access your phonebook contacts. Make sure to confirm when prompted by your phone during the phonebook download.
I am having trouble connecting my phone to SYNC.	This is a phone-dependent feature. This may be a possible phone malfunction.	Go to the website to review your phone's compatibility. Try turning off the device, resetting the device or removing the device's battery, then trying again. Try deleting your device from SYNC, deleting SYNC from your device and trying again. Check the security and auto accept and prompt always settings relative to the SYNC Bluetooth connection on your phone. Update your device's firmware. Turn off the Auto phonebook download setting.
Text messaging is not working on SYNC.	This is a phone-dependent feature. This may be a possible phone malfunction.	Go to the website to review your phone's compatibility. Try turning off the device, resetting the device or removing the device's battery, then trying again.

2017 Fiesta (CCT) Canada/United States of America, HE8J 19A321 AB enUSA, Edition date: 201607, Second Printing

USB and media issues		
Issue	**Possible cause(s)**	**Possible solution(s)**
I am having trouble connecting my device.	This may be a possible device malfunction.	Try turning off the device, resetting the device, removing the device's battery, then trying again. Make sure you are using the manufacturer's cable. Make sure you insert the USB cable correctly into the device and the USB port. Make sure that the device does not have an auto-install program or active security settings.
SYNC does not recognize my device when I turn on the car.	This is a device limitation.	Make sure you are not leaving the device in your vehicle during very hot or cold temperatures.
Bluetooth audio does not stream.	This is a phone-dependent feature. The device is not connected.	Review the device compatibility chart on the SYNC website to confirm your phone supports the Bluetooth audio streaming function. Make sure you correctly connect the device to SYNC, and that you have pressed play on your device.
SYNC does not recognize music that is on my device.	Your music files may not contain the correct artist, song title, album or genre information. The file may be corrupted. The song may have copyright protection, which does not allow it to play.	Make sure that all song details are populated. Some devices require you to change the USB settings from mass storage to MTP class.

2017 Fiesta (CCT) Canada/United States of America, HE8J 19A321 AB enUSA, Edition date: 201607, Second Printing

Vehicle Health Report and Services (Traffic, Directions and Information) issues		
Issue	**Possible cause(s)**	**Possible solution(s)**
I received a text that I did not activate Vehicle Health Report.	You did not activate your account on the website. You may have the wrong VIN (vehicle identification number) listed.	This is a free feature, but you must first register online to use it. Make sure that your VIN is correctly listed in your account.
I am unable to retrieve the report on the website, or I receive a system error.	The preferred dealer information did not load correctly.	When you register your account, you must choose a preferred dealer. If it already lists a dealer, try selecting another dealer and logging out. Log back in, change it back to your preferred dealer, and retrieve the report.
I am unable to submit a report.	This could be due to your phone's compatibility. Bad signal strength. You did not register your phone correctly on the website.	Update your cellular number in your account on the website. Make sure you have full signal strength and that your Bluetooth volume level has been turned up. Make sure the currently connected phone is registered on your SYNCMyRide account. Try deleting your phone and performing a clean pairing.
I heard a commercial when I tried to use Traffic, Directions and Information.	You did not activate this phone for this service. Your phone has ID blocker active.	This is a free feature, but you must first register online to use it. Turn off ID blocker on your phone as the system recognizes you by your phone number. Make sure the currently connected phone is the same one that is registered on your SYNCMyRide account.

2017 Fiesta (CCT) Canada/United States of America, HE8J 19A321 AB enUSA, Edition date: 201607, Second Printing

Voice command issues		
Issue	**Possible cause(s)**	**Possible solution(s)**
SYNC does not understand what I am saying.	You may be using the wrong voice commands. You may be speaking too soon or at the wrong time.	Review the phone voice commands and the media voice commands at the beginning of their respective sections. After pressing the voice icon, wait until after the tone sounds and Listening appears before saying a command. Any command spoken before this does not register with the system.
SYNC does not understand the name of a song or artist.	You may be using the wrong voice commands. You may be saying the name differently than the way you saved it. The system may not be reading the name the same way you are saying it.	Review the media voice commands at the beginning of the media section. Say the song or artist exactly as listed. If you say "Play Artist Prince", the system does not play music by Prince and the Revolution or Prince and the New Power Generation. Make sure you are saying the complete title, such as "California remix featuring Jennifer Nettles". If the song titles are in all CAPS, you have to spell them. LOLA requires you to say "L-O-L-A". Do not use special characters in the title. The system does not recognize them.
SYNC does not understand or is calling the wrong contact when I want to make a call.	You may be using the wrong voice commands. You may be saying the name differently than the way you saved it.	Review the Phone voice commands at the beginning of the phone section.

2017 Fiesta (CCT) Canada/United States of America, HE8J 19A321 AB enUSA, Edition date: 201607, Second Printing

Voice command issues		
Issue	**Possible cause(s)**	**Possible solution(s)**
	The system may not be reading the name the same way you are saying it. Contacts in your phonebook may be very short and similar, or they may contain special characters. Your phonebook contacts may be in CAPS.	Make sure you are saying the contacts exactly as they are listed. For example, if you save a contact as Joe Wilson, say "Call Joe Wilson". Using the SYNC phone menu, open the phonebook and scroll to the name SYNC is having trouble understanding. SYNC will read the name to you, giving you some idea of the pronunciation SYNC is expecting. The system works better if you list full names, such as "Joe Wilson" rather than "Joe". Do not use special characters, such as 123 or ICE, as the system does not recognize them. If a contact is in CAPS, you have to spell it. JAKE requires you to say "Call J-A-K-E".

AppLink issues		
Issue	**Possible cause(s)**	**Possible solution(s)**
When I select "Find New Apps," SYNC does not find any applications.	An AppLink capable phone is not connected to SYNC.	Ensure you have a compatible smartphone; an Android with OS 2.3 or higher or an iPhone 3GS or newer with iOS 5.0 or higher. Additionally, ensure your phone is paired and connected to

2017 Fiesta (CCT) Canada/United States of America, HE8J 19A321 AB enUSA, Edition date: 201607, Second Printing

AppLink issues		
Issue	**Possible cause(s)**	**Possible solution(s)**
		SYNC in order to find AppLink-capable apps on your device. iPhone users must also connect to SYNC's USB port with an Apple USB cable.
My phone is connected, but I still cannot find any apps.	AppLink-enabled apps are not installed and running on your mobile device.	Ensure you have downloaded and installed the latest version of the app from your phone's app store. Ensure the app is running on your phone. Some apps require you to register or login on the app on the phone before using them with AppLink. Also, some may have a "Ford SYNC" setting, so check the app's settings menu on the phone.
My phone is connected, my app(s) are running, but I still cannot find any apps.	Sometime apps do not properly close and re-open their connection to SYNC, over ignition cycles, for example.	Closing and restarting apps may help SYNC find the application if you cannot discover it inside the vehicle. On an Android device, if apps have an "Exit" or "Quit" option, select that then restart the app. If the app does not have that option, you can also manually "Force Close" the app by going to the phone's settings menu, selecting "Apps." then finding the particular app and choosing "Force stop." Don't forget to restart the app afterwards, then select "Find New Apps" on SYNC.

2017 Fiesta (CCT) Canada/United States of America, HE8J 19A321 AB enUSA, Edition date: 201607, Second Printing

AppLink issues		
Issue	**Possible cause(s)**	**Possible solution(s)**
		On an iPhone with iOS7+, to force close an app, double tab the home button then swipe up on the app to close it. Tab the home button again, then select the app again to restart it. After a few seconds, the app should then appear in SYNC's Mobile App's Menu.
My Android phone is connected, my app(s) are running, I restarted them, but I still cannot find any apps.	There is a bluetooth bug on some order versions of the Android OS. This bug may cause apps that were found the last time your phone connected to SYNC not to be found again if you have not turned off bluetooth.	Reset the Bluetooth on your phone by turning it off and then turning Bluetooth back on. If you are in your vehicle, SYNC should be able to automatically re-connect to your phone if you press the "Phone" button.

2017 Fiesta (CCT) Canada/United States of America, HE8J 19A321 AB enUSA, Edition date: 201607, Second Printing

AppLink issues		
Issue	**Possible cause(s)**	**Possible solution(s)**
My iPhone phone is connected, my app is running, I restarted the app but I still cannot find it on SYNC.	The USB connection to SYNC may need to be reset.	Unplug the USB cable from the phone, wait a moment, and plug the USB cable back in to the phone. After a few seconds, the app should appear in SYNC's Mobile Apps Menu. If not, "Force Close" the application and restart it.
I have an Android phone. I found and started my media app on SYNC, but there is no sound or the sound is very low.	The bluetooth volume on the phone may be low.	Try increasing the Bluetooth volume of the device by using the device's volume control buttons which are most often found on the side of the device.
I can only see some of the AppLink apps running on my phone listed in SYNC's Mobile Apps Menu.	Some Android devices have a limited number of bluetooth ports apps can use to connect. If you have more AppLink apps on your phone than the number of availble Bluetooth ports, you will not see all of your apps listed in SYNC's mobile apps menu.	Force close or uninstall the apps you do not want SYNC to find. If the app has a "Ford SYNC" setting, disable that setting in the app's settings menu on the phone.

2017 Fiesta (CCT) Canada/United States of America, HE8J 19A321 AB enUSA, Edition date: 201607, Second Printing

GENERAL INFORMATION

WARNING

Driving while distracted can result in loss of vehicle control, crash and injury. We strongly recommend that you use extreme caution when using any device that may take your focus off the road. Your primary responsibility is the safe operation of your vehicle. We recommend against the use of any hand-held device while driving and encourage the use of voice-operated systems when possible. Make sure you are aware of all applicable local laws that may affect the use of electronic devices while driving.

Getting to Know Your System

The SYNC 3 system allows you to interact with a variety of features using the touchscreen and voice commands. By integrating with your Bluetooth-enabled phone, the touchscreen provides easy interaction with audio, multimedia, climate control, navigation, and your phone's SYNC AppLink.

Using the Touchscreen

To operate the touchscreen, you can simply touch the item or option that you want to select. The button highlights when you select it.

The SYNC 3 layout allows you to quickly select the feature you wish to use.

Item	Menu Item	Action and Description
A	Status Bar	This bar displays icons and messages pertaining to current system activities including climate settings, voice commands and phone functions such as text messages.
B	Home	This button is available on the main screens. Pressing it takes you to the home screen view.
C	Clock	This shows the current time. You can set the clock manually or have it controlled by the vehicle's GPS location. See **Settings** (page 367).
D	Outside Temperature	This displays the current outside temperature.
E	Feature Bar	You can touch any of the buttons on this bar to select a feature.

The touchscreen allows you quick access to all of your comfort, navigation, communication and entertainment options. Using the status and feature bar you can quickly select the feature you want to use.

Note: *Your system is equipped with a feature that allows you to access and control audio features for 10 minutes after you switch the ignition off (and no doors open).*

The Status Bar

Additional icons also display in the status bar depending on market, vehicle options and current operation. If a feature is not active, the icon does not display. Certain icons may move to the left or right depending on what options are active.

2017 Fiesta (CCT) Canada/United States of America, HE8J 19A321 AB enUSA, Edition date: 201607, Second Printing

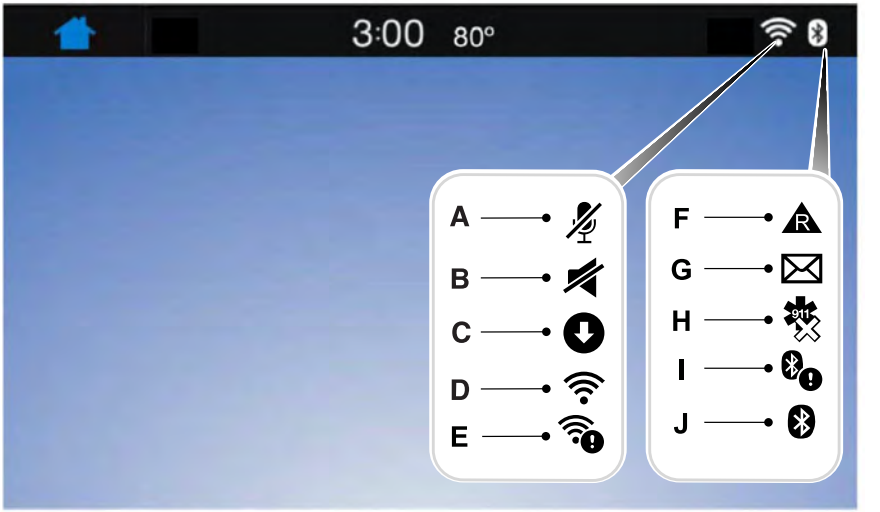

E223058

Callout	Item	Description
A	Microphone Mute	This icon displays when your phone's microphone is muted. A caller cannot hear you.
B	Mute	This icon displays when the audio system is muted.
C	Download	This icon displays when SYNC 3 has received a software update. Pressing the icon will show more details about the new software.
D	Wi-Fi	This icon displays when the system is connected to a Wi-Fi network.
E	Wi-Fi in Range	This icon displays when an available Wi-Fi network is within range.
F	Roaming	This icon displays when your cell phone is roaming.
G	Text Message	This icon displays when you receive a text message on your phone.

Callout	Item	Description
H	911 Assist Off	This icon displays when 911 Assist is set to off and your phone is connected to SYNC.
I	Bluetooth Alert	This icon displays when there is an active Bluetooth alert.
J	Bluetooth	This icon displays to show an active Bluetooth connection.

Messages may also appear in the status bar to provide you with notifications. You can select the message to view the associated feature.

Feature Bar

Feature Bar Item	Functions
Audio	Allows you to control the media playing in your vehicle. You can control all audio features including AM, FM and satellite radio, CDs, and media streaming over a Bluetooth device or through a USB connection.
Phone	Allows you to make calls, receive calls, and access the phonebook of your connected device.
Navigation (If equipped)	Allows you to see your vehicle's location on a virtual road map, get driving directions to your destination and find points of interest along your route.
Apps	Connect and control SYNC 3 compatible apps running on your iPhone or Android device. Also, access built-in additional features such as SiriusXM Traffic and Travel Link (if equipped).
Settings	You can customize your system with various settings for the touchscreen display, feature preferences, and how you want to interact with your vehicle.

2017 Fiesta (CCT) Canada/United States of America, HE8J 19A321 AB enUSA, Edition date: 201607, Second Printing

Cleaning the Touchscreen

You can remove fingerprints with a dry, clean, soft cloth.

If dirt or fingerprints are still on the screen, apply a small amount of alcohol to the cloth and try to clean it again.

Note: *Do not use detergent or any type of solvent to clean the touchscreen.*

Note: *Do not pour or spray alcohol onto the touchscreen.*

Using Voice Recognition

Using voice commands allows you to keep your hands on the wheel and eyes on the road. The system provides feedback through audible tones, prompts, questions and spoken confirmations depending on the situation and the chosen level of interaction (voice settings).

The system also asks short questions (confirmation prompts) when it is not sure of your request or when there are multiple possible responses to your request.

When using voice commands, words and icons may appear in the status bar indicating the status of the voice command session. See **Using Voice Recognition** (page 335).

Using the Steering Wheel Controls

Depending on your vehicle and option package, you can use different controls on your steering wheel to interact with the touchscreen system in different ways.

VOL: Control the volume of audio output.

Mute: Mute the audio output.

Voice: Press to start a voice session. Press again to stop the voice prompt and immediately begin speaking. Press and hold to end a voice session.

SEEK NEXT:

- While in radio mode, press to seek between memory presets.
- While in USB, Bluetooth Audio or CD mode, press to seek between songs or press and hold to fast seek.

SEEK PREVIOUS:

- While in radio mode, press to seek between memory presets.
- While in USB, Bluetooth Audio or CD mode, press to seek between songs or press and hold to fast seek.

PHONE ACCEPT: Press to answer a call or switch between calls.

PHONE REJECT: Press to end a call or reject an incoming call.

Note: *On some models, **SEEK NEXT** may be combined with **PHONE REJECT** and **SEEK PREVIOUS** may be combined with **PHONE ACCEPT.***

M: Touch the control repeatedly to switch between media sources (modes).

See **Steering Wheel** (page 68).

Using Your Bezel Controls

Depending on your vehicle and option package, you may also have these controls on your instrument panel:

- **Power:** Switch the audio system on and off.
- **VOL:** Control the volume of playing audio.
- **Seek** and **Tune:** se as you normally would in audio modes.
- **Eject:** Eject a CD from the audio system.
- **SOURCE** or **MEDIA**: Press repeatedly to advance through available media modes.

2017 Fiesta (CCT) Canada/United States of America, HE8J 19A321 AB enUSA, Edition date: 201607, Second Printing

- **SOUND:** Press to access the Sound menu where you can adjust sound and other audio settings.
- **1-6:** Press and hold to store or press to select an AM, FM or SIRIUS memory preset. See **Audio System** (page 257).
- **DISP:** Switch the display on or off. You can also touch the screen to switch the display back on.
- **Temperature, fan and climate control buttons:** Control the temperature, fan speed or settings of the climate control system. See **Climate Control** (page 96).

911 Assist

WARNINGS

Unless the 911 Assist setting is set on before a crash, the system will not dial for help which could delay response time, potentially increasing the risk of serious injury or death after a crash.

Do not wait for 911 Assist to make an emergency call if you can do it yourself. Dial emergency services immediately to avoid delayed response time which could increase the risk of serious injury or death after a crash. If you do not hear 911 Assist within five seconds of the crash, the system or phone may be damaged or non-functional.

Always place your phone in a secure location in your vehicle so it does not become a projectile or get damaged in a crash. Failure to do so may cause serious injury to someone or damage the phone which could prevent 911 Assist from working properly.

Note: *The SYNC 911 Assist feature must be set on before the incident.*

Note: *The SYNC 911 Assist feature only operates in the U.S., Canada or in a territory in which 911 is the emergency number.*

Note: *Before setting this feature on, make sure that you read the 911 Assist Privacy Notice later in this section for important information.*

Note: *If any user sets 911 Assist to on or off, that setting applies for all paired phones. If 911 Assist is switched off and the phone is connected to SYNC, an icon displays on the status bar.*

Note: *Every phone operates differently. While SYNC 911 Assist works with most cellular phones, some may have trouble using this feature.*

If a crash deploys an airbag (excluding knee airbags and rear inflatable safety belts [if equipped]) or activates the fuel pump shut-off, your SYNC-equipped vehicle may be able to contact emergency services by dialing 911 through a paired and connected Bluetooth-enabled phone. You can learn more about the 911 Assist feature, by visiting:

Website
www.owner.ford.com www.syncmyride.ca www.syncmaroute.ca

For important information about airbag deployment and the fuel pump shut-off please see the Supplementary Restrains and Roadside Emergencies sections of your owner manual.

To switch 911 Assist on and off please view the settings information. See **Settings** (page 367).

To make sure that 911 Assist works correctly:

- SYNC must be powered and working properly at the time of the incident and throughout feature activation and use.
- The 911 Assist feature must be set on before the incident.

2017 Fiesta (CCT) Canada/United States of America, HE8J 19A321 AB enUSA, Edition date: 201607, Second Printing

- You must pair and connect a Bluetooth-enabled and compatible cell phone to SYNC.
- A connected Bluetooth-enabled phone must have the ability to make and maintain an outgoing call at the time of the incident.
- A connected Bluetooth-enabled phone must have adequate network coverage, battery power and signal strength.
- The vehicle must have battery power and be located in the U.S., Canada or in a territory in which 911 is the emergency number.

In the Event of a Crash

Not all crashes will deploy an airbag or activate the fuel pump shut-off (the triggers for 911 Assist). If a connected cell phone sustains damage or loses its connection to SYNC during a crash, SYNC will search for and try to connect to a previously paired cell phone; SYNC will then attempt to call the emergency services.

Before making the call:

- SYNC provides a short window of time (about 10 seconds) to cancel the call. If you fail to cancel the call, SYNC attempts to dial 911.
- SYNC says the following, or a similar message: "SYNC will attempt to call 911, to cancel the call, press Cancel on your screen or press and hold the phone button on your steering wheel."

If you do not cancel the call, and SYNC makes a successful call, a pre-recorded message plays for the 911 operator, and then the occupant(s) in your vehicle is able to talk with the operator. Be prepared to provide your name, phone number and location immediately, because not all 911 systems are capable of receiving this information electronically.

911 Assist May Not Work If

- Your cellular phone or 911 Assist hardware sustains damage in a crash.
- The vehicle's battery or the SYNC system has no power.
- The phone(s) thrown from your vehicle are the ones paired and connected to the system.

911 Assist Privacy Notice

When you switch on 911 Assist, it may disclose to emergency services that your vehicle has been in a crash involving the deployment of an airbag or activation of the fuel pump shut-off. Certain versions or updates to 911 Assist may also be capable of electronically or verbally disclosing to 911 operators your vehicle location or other details about your vehicle or crash to assist 911 operators to provide the most appropriate emergency services. If you do not want to disclose this information, do not switch the feature on.

Safety Information

WARNING

Driving while distracted can result in loss of vehicle control, crash and injury. We strongly recommend that you use extreme caution when using any device that may take your focus off the road. Your primary responsibility is the safe operation of your vehicle. We recommend against the use of any hand-held device while driving and encourage the use of voice-operated systems when possible. Make sure you are aware of all applicable local laws that may affect the use of electronic devices while driving.

2017 Fiesta (CCT) Canada/United States of America, HE8J 19A321 AB enUSA, Edition date: 201607, Second Printing

- Do not attempt to service or repair the system. Have an authorized dealer check your vehicle.
- Do not operate playing devices if the power cords or cables are broken, split or damaged. Place cords and cables out of the way, so they do not interfere with the operation of pedals, seats, compartments or safe driving abilities.
- Do not leave playing devices in your vehicle during extreme conditions as it could cause them damage. See your device's user guide for further information.
- For your safety, some SYNC 3 functions are speed-dependent. Their use is limited to when your vehicle is traveling at speeds under 3 mph (5 km/h). Make sure that you review your device's manual before using it with SYNC 3.

Speed-restricted Features

Some features of this system may be too difficult to use while your vehicle is moving so they are restricted from use unless your vehicle is stationary.

- Screens crowded with information, such as Point of Interest reviews and ratings, SiriusXM Traffic and Travel Link sports scores, movie times or ski conditions.
- Any action that requires you to use a keyboard is restricted, such as entering a navigation destination or editing information.
- All lists are limited so the user can view fewer entries (such as phone contacts or recent phone call entries).

See the following chart for more specific examples.

Restricted features	
Cellular Phone	Pairing a Bluetooth phone.
	Browsing of list entries is limited for phone contacts and recent phone calls.
System Functionality	Editing the keypad code.
	Enabling Valet Mode.
	Editing settings while the rear view camera or active park assist are active.
Wi-Fi	Editing Wi-Fi settings.
	Editing the list of wireless networks.
	Connecting to a new Wi-Fi network.
Text Messages	Viewing received text messages.
Navigation	Using the keyboard to enter a destination.
	Adding or editing Navigation Favorites entries or Avoid Areas.

2017 Fiesta (CCT) Canada/United States of America, HE8J 19A321 AB enUSA, Edition date: 201607, Second Printing

Creating an Owner Account

Why do I need an owner account?

- Essential for keeping up with the latest software and connected features.
- Access to customer support for any questions you may have.
- Maintain account permissions.

Visit the website to sign up and register.

Website
www.owner.ford.com www.syncmyride.ca www.syncmaroute.ca

SYNC Connect (If Equipped)

With a SYNC® Connect-equipped vehicle, you can use FordPass® to track your vehicle's location and remotely access vehicle features such as start, lock and unlock and vehicle status including fuel level and approximate mileage. You can also schedule specific times to remotely start your vehicle so it's ready to hit the road as soon as you are. SYNC Connect is an optional feature on select 2017 MY vehicles. FordPass® is available through a free download via the Apple App Store® or Google Play™. Message and data rates may apply. Services may be limited by mobile phone network coverage area.

- FCC: LHJ-FAN
- IC: 2807E-FAN

Updating Your System

You can choose to download the update onto a USB drive or use Wi-Fi to deliver automatic updates.

USB Updates

To use the USB update you need to log into your owner account and visit the SYNC software update page.

Website
www.owner.ford.com www.syncmyride.ca www.syncmaroute.ca

The website notifies you if an update is available. You can then select to download the update.

You will need an empty USB drive. Please check the website for minimum requirements. Once you have inserted the USB drive into your computer, choose to start the download. Follow the instructions provided to download the files to the USB drive.

To install the update in your vehicle, remove anything that is plugged in the USB ports on the media hub and plug in the USB drive containing the update. When the USB drive is plugged in, the installation should begin immediately. After a successful installation, the update is available the next time the vehicle is started.

The installation of most files occurs in the background, and does not interrupt your use of the system. Navigation updates cannot be installed in the background, because the files are too large.

Please refer to the website for any further actions.

Updating Over Wi-Fi

To update your System over Wi-Fi your vehicle must be within the range of a Wi-Fi access point. Data rates may apply.

2017 Fiesta (CCT) Canada/United States of America, HE8J 19A321 AB enUSA, Edition date: 201607, Second Printing

To enable automatic updates using Wi-Fi, select:

Menu Item	
Settings	
Wi-Fi	
Available Wi-Fi Networks	You can then select your Wi-Fi network. You may have to enter the security code if the network is secured. The system confirms when it has connected to the network.

You must also give the system permission to update automatically. Upon vehicle delivery, the System asks you if you would like to use the automatic update feature. If you agree to automatic updates, you can press OK to confirm. If this selection does not appear upon vehicle delivery you can access it through the General Settings. See **Settings** (page 367). You can also perform a master reset. See **SYNC™ 3 Troubleshooting** (page 379).

If you would like to switch this feature on later, select:

Menu Item	
Settings	
General	
Automatic System Updates	From this menu, you can enable automatic updates. If you have not done so already, the system prompts you to set up a Wi-Fi connection when you enable this feature.

When Wi-Fi and automatic updates are enabled, your system checks for software updates periodically. If a new version is available, it downloads at that time. Software downloads can take place for up to 30 minutes after you have switched your vehicle off. The updates do not interrupt the normal use of your SYNC 3 system. If a download does not complete for any reason, the download continues where it left off at the next Wi-Fi connected opportunity. Upon activation of an update, a banner displays on the touchscreen indicating the system update. Select the icon to see more detail. This icon displays for two ignition cycles.

To switch this feature off:

Menu Item	
Settings	
General	
Automatic System Updates	In this menu selection, you can change the selection for automatic updates to OFF.

Support

The SYNC support team is available to help you with any questions you are not able to answer on your own.

Monday-Saturday, 8:30am-8:00pm EST.

Sunday, 10:30am-7:30pm EST.

United States: 1-800-392-3673.

Canada: 1-800-565-3673.

Times are subject to change due to holidays.

2017 Fiesta (CCT) Canada/United States of America, HE8J 19A321 AB enUSA, Edition date: 201607, Second Printing

Privacy Information

When you connect a cellular phone to SYNC 3, the system creates a profile within your vehicle that links to that cellular phone. This profile helps in offering you more cellular features and operating more efficiently. Among other things, this profile may contain data about your cellular phone book, text messages (read and unread), and call history, including history of calls when your cell phone was not connected to the system. In addition, if you connect a media device, the system creates and retains an index of supported media content. The system also records a short diagnostic log of approximately 10 minutes of all recent system activity. The log profile and other system data may be used to improve the system and help diagnose any problems that may occur.

The cellular profile, media device index, and diagnostic log remain in your vehicle unless you delete them and are generally accessible only in your vehicle when the cellular phone or media player is connected.

If you sell or transfer your vehicle, we recommend you perform a Master Reset to erase all stored information. You can find more information about the Master Reset in General Settings. See **Settings** (page 367). System data cannot be accessed without special equipment and access to your vehicle's SYNC 3 module. Ford Motor Company and Ford of Canada do not access the system data for any purpose other than as described absent consent, a court order, or where required by law enforcement, other government authorities, or other third parties acting with lawful authority. Other parties may seek to access the information independently of Ford Motor Company and Ford of Canada.

2017 Fiesta (CCT) Canada/United States of America, HE8J 19A321 AB enUSA, Edition date: 201607, Second Printing

HOME SCREEN

E207616

Item	Tile	Home screen display
A	Audio	Shows the active media source. If your vehicle does not have navigation, this space contains the compass.
B	Phone	The name of the connected phone appears on the screen. The status of the phone features also appear. This includes signal strength, battery charge, 911 assist setting state (On or Off), text messaging and roaming.
C	Navigation *	This map displays your current location or current route in real time. When you have navigation active, you also see the next turn and the length of time and distance to your destination.

2017 Fiesta (CCT) Canada/United States of America, HE8J 19A321 AB enUSA, Edition date: 201607, Second Printing

Item	Tile	Home screen display
		If your vehicle does not have navigation, this space contains the audio information.

* If equipped.

You can touch any of the feature displays to access that feature.

Anytime you select the home button, the system returns you to this screen.

USING VOICE RECOGNITION

The SYNC 3 system allows you to use voice commands, to control features like audio and phone. By using voice commands, you can keep your hands on the wheel and your eyes on the road.

You can access each feature controlled by SYNC 3 through a variety of commands.

To activate the SYNC 3 voice commands push the voice button on the steering wheel and wait for the prompt.

___ is a dynamic listing, meaning that it can be the name of anything, such as artist, the name of contact or number. The context and the description of the command tell you what to say for this dynamic option.

There are some commands that work for every feature, these commands are:

Voice Command	Action and Description
Main Menu	Brings you to the main menu.
Go back	Returns you to the previous screen.
Cancel	Ends the voice session.
List of Commands	Gives you a list of possible voice commands.
___ List of Commands	You can name any feature and the system gives a list of commands available for the feature. For example, you could say:
	Phone List of Commands
	Navigation List of Commands
Next Page	You can use this command to view the next page of options on any screen where multiple pages of choices are given.
Previous Page	You can use this command to view the previous page of options on any screen where multiple pages of choices are given.
Help	Gives you available commands you can use on the current screen.

2017 Fiesta (CCT) Canada/United States of America, HE8J 19A321 AB enUSA, Edition date: 201607, Second Printing

Included here are some of the most popular commands for each SYNC 3 feature.

Audio Voice Commands

___ is a dynamic listing, meaning that for audio voice commands it can be the name of a Sirius channel or a channel number, a radio frequency number, or the name of a artist, album, song or a genre.

To control the media features, press the voice button and when prompted, say:

Voice command	Description
Sirius Channel ___ *	You can say the Sirius channel name or number such as "Sirius channel 16".
You can also turn to a Sirius channel by saying the channel's name, such as "The Pulse".	
AM ___ FM ___	Allows you to tune to a specific FM or AM frequency such as "88.7 FM" or "1580 AM".
FM ___ HD ___ *	Allows you to tune to a specific HD frequency such as “88.7 FM HD 1”.
Bluetooth Audio	Allows you to listen to music on your Bluetooth-connected device.
USB	Allows you to listen to music on your USB connected device.
Play Genre ___ Play Playlist ___ Play Artist ___ Play Album ___ Play Podcast ___ Play Song ___ Play Audiobook ___	For USB audio only, you can say the name of an artist, album, song or a genre to listen to that selection. Your system must finish indexing before this option is available. For example, you could say "Play artist, The Beatles" or "Play song, Penny Lane".
Browse ___	For USB audio only, you can say the name of an artist, album, or a genre to browse by that selection. Your system must finish indexing before this option is available. For example you can say "Browse The Beatles" or "Browse folk".

* This option may not be available in all markets or may require a subscription.

2017 Fiesta (CCT) Canada/United States of America, HE8J 19A321 AB enUSA, Edition date: 201607, Second Printing

Phone Voice Commands

You can use voice commands to connect your Bluetooth-enabled phone to the system.

Pairing a Phone

To pair your phone, press the voice button and when prompted, say:

Voice command	Description
Pair Phone	Follow the on-screen instructions to complete the pairing process. See **Settings** (page 367).

Making Calls

___ is a dynamic listing, meaning that for phone voice commands it can be the name of the contact you wish to call or the digits you want to dial.

Press the voice button and say a command similar to the following:

Voice command	Description
Call ___	Allows you to call a specific contact from your phonebook such as "Call Jenny".
Call ___ at ___	Allows you to call a specific contact from your phonebook at a specific location such as "Call Jenny at Home".
Dial ___	Allows you to dial a specific number such as “Dial 867-5309”.

Please make sure that you are saying the contact name exactly as it appears in your contact list.

Once you have provided the digits of the phone number, you can say the following commands:

Voice Command	Description
<0-9>	If the full number was not entered with the first command, you can continue saying the number.
Dial	Tells SYNC 3 to make the phone call.
Delete	Tells SYNC 3 to erase the last block of digits stated.
Clear	Tells SYNC 3 to erase the entire number.

2017 Fiesta (CCT) Canada/United States of America, HE8J 19A321 AB enUSA, Edition date: 201607, Second Printing

Text Message Voice Commands

To access text message options, press the voice button and say:

Voice command	Description
Listen to Message	
Listen to text message ___	You can say the number of the message you would like to hear.
Reply to Message	

Navigation Voice Commands

Setting a Destination

You can use any of the following commands to set a destination or find a point of interest.

___ is a dynamic listing, meaning that for navigation voice commands it can be a POI category or an address.

You can find an address, a point of interest (POI), or search for points of interest by category:

Voice command	Description
Find an Address	Allows you to enter the address search functionality.
Find a ___	State the name of the POI category you would like to search for such as "Find restaurants".
Find POI	Allows you to enter the POI search functionality.
Find Intersection	Allows you to enter the intersection search functionality.
Destination Nearest ___	State the name of the POI category you would like to search for nearby such as "Destination nearest restaurants".
Destination Previous Destination	Allows you to see a list of your previous destinations.
Destination Home	Allows you to route to your home address.

2017 Fiesta (CCT) Canada/United States of America, HE8J 19A321 AB enUSA, Edition date: 201607, Second Printing

In addition, you can say these commands when a route is active:

Voice command	Description
Cancel Route	Cancels the current route.
Detour	Allows you to select an alternate route.
Repeat Instruction	Repeats the last guidance prompt.
Show Route	Shows the current route.
Where Am I	Provides current location.
Zoom in	Allows you to zoom in on the map.
Zoom out	Allows you to zoom out from the map.

Mobile App Voice Commands (If Equipped)

The following voice commands are always available:

Voice command	Description
Mobile Apps	SYNC 3 will prompt you to say the name of an app to start it on SYNC 3.
List Mobile Apps	SYNC 3 will list all of the currently available Mobile Apps.
Find New Apps	SYNC 3 will search and connect to compatible app(s) running on your mobile device.

There are also voice commands that you can use when app(s) are connected to SYNC 3:

Voice command	Description
Say the name of an app	At any time, you can say the name of a mobile app to start the mobile app on SYNC 3.
Say the name of an app, followed by help	SYNC 3 will list the available voice commands for the specified app if the app is running on SYNC 3.

2017 Fiesta (CCT) Canada/United States of America, HE8J 19A321 AB enUSA, Edition date: 201607, Second Printing

SiriusXM Traffic and Travel Link Voice Commands (If Equipped)

SiriusXM Traffic and Travel Link may not be available in all markets. Activation and a subscription are required.

You can say the following commands to access SiriusXM Traffic and Travel Link:

Voice command	Description
Show Traffic	Displays a list of traffic incidents.
Show Weather Map	Displays the current weather map.
Show Fuel Prices	Displays a list of fuel prices.
Show 5 Day Forecast	Displays the 5 day weather forecast.
Help	

Voice Settings Commands

You can say the following commands to access the voice settings:

Voice command	Description
Voice Settings	Allows you to enter the voice settings functionality.
Interaction Mode Standard	Sets standard prompting with longer prompts.
Interaction Mode Advanced	Sets advanced prompting with shorter prompts.
Phone Confirmation On	Allows the system to confirm before making a phone call.
Phone Confirmation Off	The system does not confirm before placing a call.
Voice Command Lists On	The system displays a short list of available commands.
Voice Command Lists Off	The system does not display the list of commands.

You can use the volume control to adjust the volume of the system voice prompts. While prompt is active, adjust the volume control up or down to your desired setting.

2017 Fiesta (CCT) Canada/United States of America, HE8J 19A321 AB enUSA, Edition date: 201607, Second Printing

Note: *Depending on the current climate control settings, the fan speed may automatically go down while issuing voice commands or while making and receiving phone calls via SYNC to reduce the amount of background noise in the vehicle. The fan speed will automatically return to normal operation once the voice session ends. Fan speed can also be adjusted normally during a voice session, simply press fan buttons (or turn fan knob) to increase or decrease fan speed to desired setting.*

To disable this automatic fan speed reduction feature during voice sessions, press and hold the climate control AC and Recirculated air buttons simultaneously, release and then increase fan speed within 2 seconds. To re-enable this feature, repeat the above sequence.

ENTERTAINMENT

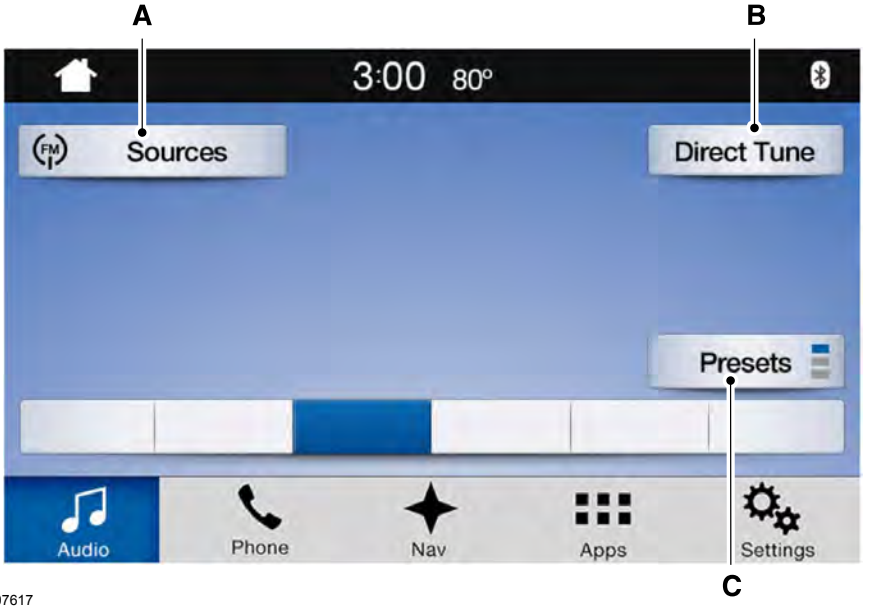

E207617

2017 Fiesta (CCT) Canada/United States of America, HE8J 19A321 AB enUSA, Edition date: 201607, Second Printing

Message	Message and description
A	Sources
B	Direct Tune
C	Presets

You can access these options using the touchscreen or voice commands.

Sources

Press this button to select the source of media you want to listen to.

Menu item	
AM	
FM	
SIRIUS *	
CD	
USB	The name of the USB that is plugged in displays here.
Bluetooth Stereo	
Apps	If you have SYNC 3 compatible apps on your connected smart phone, they display here as individual source selections.

* This feature may not be available in all markets and requires an active subscription.

AM/FM Radio

Tuning a Station

You can use the tune or seek controls on the radio bezel to select a station.

To tune a station using the touchscreen, select:

Menu item
Direct Tune

A pop up appears, allowing you to type in the frequency of a station. You can only enter a valid station for the source you are currently listening to.

You can press the backspace button to delete the previously entered number.

Once you have entered the station's call numbers, you can select:

Menu item	Action and description
Enter	Press to begin playing the station you have entered.
Cancel	Press to exit without changing the station.

Presets

To set a new preset, tune to the station and then press and hold one of the memory preset buttons. The audio mutes briefly while the system saves the station and then returns.

2017 Fiesta (CCT) Canada/United States of America, HE8J 19A321 AB enUSA, Edition date: 201607, Second Printing

There are two preset banks available for AM and three banks for FM. To access additional presets, tap the preset button. The indicator on the preset button shows which bank of presets you are currently viewing.

SiriusXM® Satellite Radio (If Activated)

Note: *This feature may not be available in all markets and requires an active subscription.*

E234451

SiriusXM satellite radio is a subscription-based satellite radio service that broadcasts a variety of music, sports, news, weather, traffic and entertainment programming. Your factory-installed SiriusXM satellite radio system includes hardware and a limited subscription term that begins on the date of sale or lease of your vehicle. See an authorized dealer for availability.

For more information on extended subscription terms (a service fee is required), the online media player and a list of SiriusXM satellite radio channels, and other features, please visit www.siriusxm.com in the United States, www.siriusxm.ca in Canada, or call SiriusXM at 1-888-539-7474.

Note: *SiriusXM reserves the unrestricted right to change, rearrange, add or delete programming. This includes canceling, moving or adding particular channels, and its prices, at any time, with or without notice to you. Ford Motor Company shall not be responsible for any such programming changes.*

Note: *This receiver includes the eCos real-time operating system. eCos is published under the eCos License.*

The following buttons are available for SiriusXM:

Menu item	Action and description	
Browse	Touch this button to see a list of available stations.	
Direct Tune	A pop-up appears, allowing you to type in the call numbers of a station. Once you enter the stations call numbers, you can select:	
	Enter	The system tunes to the station you select.
	Cancel	You exit the pop-up and the current station continues to play.
	You can press the backspace button to delete the previous number.	

2017 Fiesta (CCT) Canada/United States of America, HE8J 19A321 AB enUSA, Edition date: 201607, Second Printing

Menu item	Action and description	
Replay	Replay audio on the current channel. You can replay approximately 45 minutes of audio as long as you remain tuned to the current station. Changing stations erases the previous audio.	
	Live	When you are in replay mode, you are not able to select a different preset until you return to live audio. Pressing this button returns you to the live broadcast.
ALERT	Save the current song, artist, or team as a favorite. The system alerts you when it plays again on any channel. Selecting this button allows you to enable and edit alerts. See **Settings** (page 367).	

Memory Presets

To set a preset, tune to the station then press and hold one of the memory preset buttons. The audio mutes briefly while the system saves the station and returns once the station is stored.

There are three preset banks available for SiriusXM. To access additional presets, tap the preset button. The indicator on the preset button shows which bank of presets you are currently viewing.

Satellite Radio Electronic Serial Number (ESN)

You need your ESN to activate, modify or track your satellite radio account. See **Settings** (page 367).

SiriusXM Satellite Radio Reception Factors and Troubleshooting

Potential reception issues	
Antenna obstructions	For optimal reception performance, keep the antenna clear of snow and ice build-up and keep luggage and other materials as far away from the antenna as possible.
Terrain	Hills, mountains, tall buildings, bridges, tunnels, freeway overpasses, parking garages, dense tree foliage and thunderstorms can interfere with your reception.
Station overload	When you pass a ground-based broadcast-repeating tower, a stronger signal may overtake a weaker one and the audio system may mute.
Satellite radio signal interference	Your display may show ACQUIRING... to indicate the interference and the audio system may mute.

2017 Fiesta (CCT) Canada/United States of America, HE8J 19A321 AB enUSA, Edition date: 201607, Second Printing

Troubleshooting tips		
Message	**Cause**	**Action**
Acquiring Signal	Radio requires more than two seconds to produce audio for the selected channel.	No action required. This message should disappear shortly.
Satellite antenna fault SIRIUS system failure	There is an internal module or system failure present.	If this message does not clear shortly, or with an ignition key cycle, your receiver may have a fault. See an authorized dealer for service.
Invalid Channel	The channel is no longer available.	Tune to another channel or choose another preset.
Unsubscribed Channel	Your subscription does not include this channel.	Contact SiriusXM at 1-888-539-7474 to subscribe to the channel, or tune to another channel.
Satellite acquiring signal...	The signal is lost from the SiriusXM satellite or SiriusXM tower to your vehicle antenna.	The signal is blocked. When you move into an open area, the signal should return.
Updating...	Update of channel programming in progress.	No action required. The process may take up to three minutes.
Questions? Call 1-888-539-7474	Your satellite service is no longer available.	Contact SiriusXM at 1-888-539-7474 to resolve subscription issues.
None found. Check channel guide.	All the channels in the selected category are either skipped or locked.	Use the channel guide to turn off the Lock or Skip function on that station.
SIRIUS Subscription updated	SiriusXM has updated the channels available for your vehicle.	No action required.

HD Radio™ Information (If Available)

Note: *This feature may not be available in all markets.*

To activate HD radio, please see the Radio Settings in the Settings Chapter. See **Settings** (page 367).

Note: *HD Radio broadcasts are not available in all markets.*

2017 Fiesta (CCT) Canada/United States of America, HE8J 19A321 AB enUSA, Edition date: 201607, Second Printing

HD Radio technology is the digital evolution of analog AM/FM radio. Your system has a special receiver that allows it to receive digital broadcasts (where available) in addition to the analog broadcasts, it already receives. Digital broadcasts provide a better sound quality than analog broadcasts with free, crystal-clear audio and no static or distortion. For more information, and a guide to available stations and programming, please visit:

Website
www.hdradio.com

When HD Radio is on and you tune to a station broadcasting HD Radio technology, you may notice the following indicators on your screen:

E142616

The HD logo is grey when acquiring a digital station, and then changes to orange when digital audio is playing. When this logo is available, you may also see Title and Artist fields on-screen.

The multicast indicator appears in FM mode (only) if the current station is broadcasting multiple digital broadcasts. The highlighted numbers signify available digital channels where new or different content is available. HD1 signifies the main programming status and is available in analog and digital broadcasts. Other multicast stations (HD2 through HD7) are only available digitally.

Note: *There is also an additional feature for stations that have more than 1 HD multicast (For example, HD1 or HD2). The HD logo and Radio text appears as a button. Pressing this button allows you to cycle through all of the HD stations on that specific frequency. For example, if you are on 101.1 and it has HD1, HD2, HD3, pressing the button repeatedly causes the radio to cycle through the HD stations in a cyclic increasing order.*

When HD Radio broadcasts are active, you can access the following functions:

Message	Action and description
Presets	Allows you to save an active channel as a memory preset. Touch and hold a memory preset slot until the sound returns. There is a brief mute while the radio saves the station. Sound returns when the channel saves. When switching to an HD2 or HD3 memory preset, the sound mutes before the digital audio plays, because the system has to reacquire the digital signal.

Note: *As with any station you save, you cannot access the saved station if your vehicle is outside the station's reception area.*

2017 Fiesta (CCT) Canada/United States of America, HE8J 19A321 AB enUSA, Edition date: 201607, Second Printing

HD Radio Reception and Station Troubleshooting

Potential reception issues	
Reception area	If you are listening to a multicast station and you are on the fringe of the reception area, the station may mute due to weak signal strength.
	If you are listening to HD1, the system changes back to the analog broadcast until the digital broadcast is available again. However, if you are listening to any of the possible HD2-HD7 multicast channels, the station mutes and stays muted unless it is able to connect to the digital signal again.
Station blending	When the system first receives a station (aside from HD2-HD7 multicast stations), it first plays the station in the analog version. Once the receiver verifies the station is an HD Radio station, it shifts to the digital version. Depending on the station quality, you may hear a slight sound change when the station changes from analog to digital. Blending is the shift from analog to digital sound or digital back to analog sound.

In order to provide the best possible experience, use the contact form to report any station issues found while listening to a station broadcasting with HD Radio technology. Independent entities own and operate each station. These stations are responsible for ensuring all audio streams and data fields are accurate.

Potential station issues		
Issues	**Cause**	**Action**
Echo, stutter, skip or repeat in audio. Increase or decrease in audio volume.	This is poor time alignment by the radio broadcaster.	No action required. This is a broadcast issue.
Sound fading or blending in and out.	The radio is shifting between analog and digital audio.	No action required. The reception issue may clear up as you continue to drive.
There is an audio mute delay when selecting HD2 or HD3, multicast preset or Direct Tune.	The digital multicast is not available until the HD Radio broadcast is decoded. Once decoded, the audio is available.	No action required. This is normal behavior. Wait until the audio is available.

2017 Fiesta (CCT) Canada/United States of America, HE8J 19A321 AB enUSA, Edition date: 201607, Second Printing

Potential station issues		
Issues	**Cause**	**Action**
Cannot access HD2 or HD3 multicast channel when recalling a preset or from a direct tune.	The previously stored multicast preset or direct tune is not available in your current reception area.	No action required. The station is not available in your current location.
Text information does not match currently playing audio.	Data service issue by the radio broadcaster.	Fill out the station issue form. *
There is no text information shown for currently selected frequency.	Data service issue by the radio broadcaster.	Fill out the station issue form. *

HD Radio Technology manufactured under license from DTS Inc. U.S. and foreign patents. HD Radio and the HD and HD Radio logos are proprietary trademarks of DTS Inc. Ford Motor Company and DTS Inc. are not responsible for the content sent using HD Radio technology. Content may be changed, added or deleted at any time at the station owner's discretion.

* You can find the form here:

Website
http://hdradio.com/stations/feedback

CD

Once you select this option, the system returns you to the main audio screen.

The current audio information appears on the screen.

The following buttons are also available:

Button	Function
Browse	You can use the browse button to select a track.
Repeat	Select this button and a small number one displays to indicate the track is set to repeat. For MP3 CDs, this button allows you to toggle through repeat off, repeat one track (a small number one displays), and repeat current folder (a small folder displays).
Shuffle	Select the shuffle symbol to have the audio on the disk play in random order.

You can use the forward, reverse, pause or play buttons to control the audio playback.

2017 Fiesta (CCT) Canada/United States of America, HE8J 19A321 AB enUSA, Edition date: 201607, Second Printing

Bluetooth Stereo or USB

Bluetooth Stereo and USB allow you to access media that you store on your Bluetooth device or USB device such as music, audio books or podcasts.

The following buttons are available for Bluetooth and USB:

Button	Function
Repeat	Pressing the repeat button toggles the repeat setting through three modes: repeat off (button not highlighted), repeat all (button highlighted) and repeat track (button highlighted with a small number one).
Shuffle	Play the tracks in random order.

You can use the forward, reverse, pause or play buttons to control the audio playback.

To get more information about the currently playing track, press the cover art or Info button.

For some devices, SYNC 3 is able to provide 30-second skip buttons when you listen to audio books or podcasts. These buttons allow you to skip forward or backward within a track.

While playing audio from a USB device you can look for certain music by selecting the following:

Button	Function
Browse	If available, displays the list of tracks in the Now Playing playlist.
New Search	This option, which is available under browse, allows you to play all tracks or to filter the available media into one of the below categories.
	Play All
	Playlists
	Artists
	Albums
	Songs
	Genres
	Podcasts
	Audio books

2017 Fiesta (CCT) Canada/United States of America, HE8J 19A321 AB enUSA, Edition date: 201607, Second Printing

Button	Function
	Composers
A-Z Jump	This button allows you to choose a specific letter to view within the category you are browsing.
Explore Device	If available, this allows you to browse the folders and files on your USB device.

USB Ports

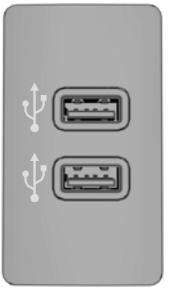

E211463

The USB ports are in the center console or behind a small access door in the instrument panel.

This feature allows you to plug in USB media devices, memory sticks, flash drives or thumb drives, and charge devices if they support this feature.

Select this option to play audio from your USB device.

Apps

The system supports the use of certain audio apps such as Pandora or iHeartRadio through a USB or bluetooth-enabled device.

Each app gives you different on-screen options depending on the app's content. See **Apps** (page 364).

Supported Media Players, Formats and Metadata Information

The system is capable of hosting nearly any digital media player, including iPod, iPhone, and most USB drives.

Supported audio formats include MP3, WMA, WAV, AAC, and FLAC.

Supported audio file extensions include MP3, WMA, WAV, M4A, M4B, AAC, and FLAC.

Supported USB file systems include: FAT, exFAT, and NTFS.

SYNC 3 is also able to organize the media from your USB device by metadata tags. Metadata tags, which are descriptive software identifiers embedded in the media files, provide information about the file.

If your indexed media files contain no information embedded in these metadata tags, SYNC 3 may classify the empty metadata tags as unknown.

SYNC 3 is capable of indexing up to 50,000 songs per USB device, for up to 10 devices.

2017 Fiesta (CCT) Canada/United States of America, HE8J 19A321 AB enUSA, Edition date: 201607, Second Printing

PHONE

WARNING

Driving while distracted can result in loss of vehicle control, crash and injury. We strongly recommend that you use extreme caution when using any device that may take your focus off the road. Your primary responsibility is the safe operation of your vehicle. We recommend against the use of any hand-held device while driving and encourage the use of voice-operated systems when possible. Make sure you are aware of all applicable local laws that may affect the use of electronic devices while driving.

Hands-free calling is one of the main features of the system. Once you pair your cell phone, you can access many options using the touchscreen or voice commands. While the system supports a variety of features, many are dependent on your cell phone's functionality.

Pairing Your Cell Phone for the First Time

Pair your Bluetooth-enabled phone with the system before using the functions in hands-free mode.

Switch on Bluetooth on your device to begin pairing. See your phone's manual if necessary.

To add a phone, select:

Menu Item
Add Phone

1. Follow the on-screen instructions.
2. A prompt alerts you to search for the system on your phone.
3. Select your vehicle's make and model as it displays on your phone.
4. Confirm that the six-digit number appearing on your phone matches the six-digit number on the touchscreen.
5. The touchscreen indicates when the pairing is successful.
6. Your phone may prompt you to give the system permission to access information. To check your phone's compatibility, see your phone's manual or visit the website.

Alternatively, to add a phone, select:

Menu Item
Add Phone
Then select:
Discover Other Bluetooth Devices

1. Follow the on-screen instructions.
2. Select your phone's name when it appears on the touchscreen.
3. Confirm that the six-digit number appearing on your phone matches the six-digit number on the touchscreen.
4. The touchscreen indicates when the pairing is successful.
5. Your phone may prompt you to give the system permission to access information. To check your phone's compatibility, see your phone's manual or visit the website.

At a minimum, most cell phones with Bluetooth wireless technology support the following functions:

- Answering an incoming call.
- Ending a call.
- Dialing a number.
- Call waiting notification.
- Caller identification.

2017 Fiesta (CCT) Canada/United States of America, HE8J 19A321 AB enUSA, Edition date: 201607, Second Printing

Other features, such as text messaging using Bluetooth and automatic phonebook download, are phone-dependent features.

To check your phone's compatibility, see your phone's manual or visit the website:

Websites
owner.ford.com

Websites
www.syncmyride.ca www.syncmaroute.ca

Phone Menu

This menu becomes available after pairing a phone.

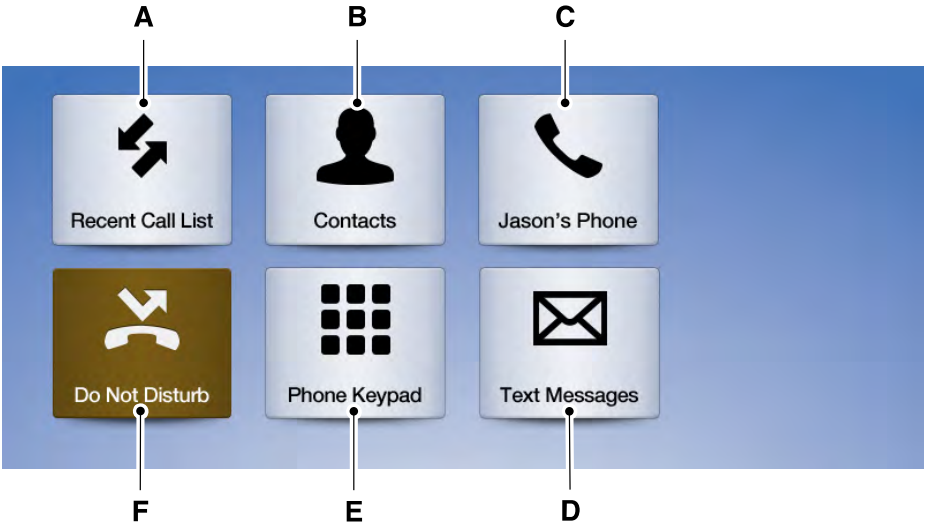

E205447

Item	Menu Item	Action and Description
A	Recent Call List	Displays your recent calls. You can place a call by selecting an entry from this list.

2017 Fiesta (CCT) Canada/United States of America, HE8J 19A321 AB enUSA, Edition date: 201607, Second Printing

Item	Menu Item	Action and Description			
		You can also sort the calls by selecting the drop down menu at the top of the screen. You can choose:			
		All	Incoming	Outgoing	Missed
B	Contacts	All of your contacts from your phone display in alphabetical order.			
		A-Z Jump		Selecting this button allows you to choose a specific letter to view.	
C	Phone Settings	Displays the name of your phone and takes you to the phone settings options. From this menu, you can pair subsequent devices, set ring tones and alerts. See **Settings** (page 367).			
D	Text Messages	Displays all recent text messages.			
E	Phone Keypad	Use this keypad to dial in a phone number. Use the backspace button to delete numbers.			
		Call		Press this button to begin a call.	
F	Do Not Disturb	Touch this button to send all calls directly to your voicemail. Calls are rejected if you do not have voicemail set up on your phone. New text message notifications are not displayed on the screen and all ringtones and alerts are set to silent.			

Users with phones having voice services may see a button to access the feature. For example, iPhone users see a Siri button. A press and hold of the voice button on the steering wheel also accesses this feature.

Note: *Certain features are speed-dependent and not available when your vehicle is moving.*

Making Calls

There are many ways to make calls from the SYNC 3 system, including using voice commands. See **Using Voice Recognition** (page 335). You can use the touchscreen to place calls as well.

2017 Fiesta (CCT) Canada/United States of America, HE8J 19A321 AB enUSA, Edition date: 201607, Second Printing

To call a number in your contacts, select:

Menu Item	Action and Description
Contacts	You can then select the name of the contact you want to call. Any numbers stored for that contact display along with any stored contact photos. You can then select the number that you want to call. The system begins the call.

To call a number from your recent calls, select:

Menu Item	Action and Description
Recent Call List	You can then select an entry that you want to call. The system begins the call.

To call a number that is not stored in your phone, select:

Menu Item	Action and Description
Phone Keypad	Select the digits of the number you wish to call.
Call	The system begins the call.

Pressing the backspace button deletes the last digit you typed.

Receiving Calls

During an incoming call, an audible tone sounds. Caller information appears in the display if it is available.

To accept the call, select:

Menu Item
Accept

Note: *You can also accept the call by pressing the phone button on the steering wheel.*

To reject the call, select:

Menu Item
Reject

Note: *You can also reject the call by pressing the phone button on the steering wheel.*

Ignore the call by doing nothing. SYNC 3 logs it as a missed call.

During a Phone Call

During a phone call, the contacts name and number display on the screen along with the call duration.

The phone status items are also visible:

- Signal Strength.
- Battery.
- 911 Assist (United States and Canada only). See **Settings** (page 367).

You can select any of the following during an active phone call:

2017 Fiesta (CCT) Canada/United States of America, HE8J 19A321 AB enUSA, Edition date: 201607, Second Printing

Item	
End Call	Immediately end a phone call. You can also press the button on the steering wheel.
Keypad	Press this to access the phone keypad.
Mute	You can switch the microphone off so the caller does not hear you.
Privacy	Transfer the call to the cell phone or back to SYNC 3.

Text Messaging

Note: *Downloading and sending text messages using Bluetooth are cell phone-dependent features.*

Note: *Certain features in text messaging are speed-dependent and not available when your vehicle is traveling at speeds over 3 mph (5 km/h).*

Receiving a Text Message

When a new message arrives, an audible tone sounds and the screen displays a pop-up with the caller name and ID, if supported by your cell phone. You can select:

Menu Item	Action and Description
Hear It	Have SYNC 3 read the message to you.
View	View the text on the touchscreen.
Call	To call the sender.
Reply	You can select from 15 preset messages. Press the message that you would like to use and confirm to send the message. SYNC 3 confirms when the message is sent successfully.
Close	To exit the screen.

Smartphone Connectivity (If Equipped)

SYNC 3 allows you to use Apple CarPlay and Android Auto to access your phone.

When you use Apple CarPlay or Android Auto, you can:

- Make calls.
- Send and receive messages.
- Listen to music.
- Use your phone's voice assistant.

Apple CarPlay and Android Auto disable some SYNC 3 features.

Most Apple CarPlay and Android Auto features use mobile data.

Apple CarPlay

Apple CarPlay requires an iPhone 5 or newer with iOS 7.1 or newer. Updating to the latest iOS version is recommended.

1. Plug your phone into a USB port. See **USB Port** (page 275).

2017 Fiesta (CCT) Canada/United States of America, HE8J 19A321 AB enUSA, Edition date: 201607, Second Printing

2. Follow the prompts on the touchscreen.
3. Follow the prompts that appear on your phone to allow access to Apple CarPlay.

After completing the setup, your phone connects to CarPlay automatically when plugged into a USB port.

To disable this feature from the Settings screen, select:

Menu Item
Apple CarPlay Preferences
Your device is listed if SYNC detects Apple CarPlay. Select the name of your device and select:
Disable

To return to SYNC 3, go to the Apple CarPlay home screen and select the SYNC app.

Note: *Contact Apple for Apple CarPlay support.*

Android Auto

Android Auto is compatible with most devices with Android 5.0 or newer.

1. Download the Android Auto app to your device from Google Play to prepare your device (this may require mobile data usage).

Note: *The Android Auto App may not be available within your current market.*

2. Plug your device into a USB port. See **USB Port** (page 275).
3. To switch this feature on from the Settings screen, scroll left on the screen and select:

Menu Item
Android Auto Preferences
Enable Android Auto

Note: *Android Auto must be switched on after plugging in your device.*

To disable this feature from the Settings screen, select:

Menu Item
Android Auto Preferences
Your device is listed if SYNC detects Android Auto. Select the name of your device and select:
Disable

Note: *You may need to slide your Settings screen to the left to select* ***Apple CarPlay Preferences*** *or* ***Android Auto Preferences****.*

To return to SYNC 3, select the speedometer icon in the Android Auto menu bar at the bottom of the touchscreen, and then touch the option to return to SYNC.

Note: *Contact Google for Android Auto support.*

NAVIGATION

Your navigation system is comprised of two main features, destination mode and map mode.

2017 Fiesta (CCT) Canada/United States of America, HE8J 19A321 AB enUSA, Edition date: 201607, Second Printing

Map Mode

Map mode shows advanced viewing comprised of 2D city maps, 3D landmarks and 3D city models (when available). 2D city maps show detailed outlines of buildings, visible land use, landscape features, and detailed railroad infrastructure for the most essential cities around the globe.

3D landmarks appear as clear, visible objects that are typically recognizable and have a certain tourism value.

3D city models are complete 3D models of entire city areas including navigable roads, parks, rivers and rendered buildings. 3D landmarks and city models appear in 3D map mode only. Coverage of these varies and improves with updated map releases.

Select the zoom in icon to see a closer view of the map.

Select the zoom out icon to see a farther away view of the map.

You can adjust the view in preset increments. You can also pinch to zoom in or out of the map.

The information bar tells you the names of streets, cities or landmarks as you hover over them with the crosshair curser.

You can change your view of the map by tapping on the location indicator icon on the right hand side of the screen. You can choose from the following options:

Heading up (2D map) This always shows the direction of forward travel to be upward on the screen. This view is available for map scales up to 3 mi (5 km).

North up (2D map) always shows the northern direction to be upward on the screen.

3D map mode provides an elevated perspective of the map. Adjust this viewing angle and rotate the map 180 degrees by touching the map twice, and then dragging your finger along the shaded bar with arrows at the bottom of the map.

Re-center the map by pressing this icon whenever you scroll the map away from your vehicle's current location.

Points of Interest (POI) grouping icon: You can choose up to three POI icons to display on the map. If the chosen POIs are located close together or are at the same location a box is used to display a single category icon instead of repeating the same icon, in order to reduce clutter. When you select the box on the map, a pop-up appears indicating how many POIs are in this location. Select the pop up to see a list of the available POIs. You can scroll through and select POIs from this list.

If your vehicle is low on charge or fuel, station icons automatically display on the map.

If you have subscribed to SiriusXM Traffic and Travel Link (where available), traffic flow will be indicated on the map by green (clear), yellow (slowing), and red (stopped) road highlights. Traffic flow is indicated where the information is available and varies across the US.

You can choose to display traffic icons on the map representing twelve different types of incidents. See **Settings** (page 367).

2017 Fiesta (CCT) Canada/United States of America, HE8J 19A321 AB enUSA, Edition date: 201607, Second Printing

You can set a destination by hovering above a location and selecting:

Button
Start

Destination Mode

To set a destination, press:

Menu Item	Description
Destination	
Enter a navigation destination in any of the following formats:	
Search	Street Address (number, street, city, state) For example "12 Mainstreet Dearborn MI"
	Partial Address (number, street) if searching in current state (number, street and zip code (or postal code in Canada)) if searching out of state You can enter unique addresses that contain door number prefixes with or without the prefix. For example, you could enter "6N340 Fairway Lane" or "340 Fairway Lane".
	City (name or zip code)
	Point of Interest (name or category)
	Intersection (street 1 / street 2) (street 1 and street 2) (street 1 & street 2) (street 1 @ street 2) (street 1 at street 2)
	Latitude and Longitude (##.###### , ##.######) This is in a decimal degrees format, one to six decimal places are accepted.

2017 Fiesta (CCT) Canada/United States of America, HE8J 19A321 AB enUSA, Edition date: 201607, Second Printing

Menu Item	Description	
	You are given autocomplete options below the address bar to select as you type. If you do not give an exact destination, a menu displays with your possible selections.	
Previous Destinations	Collections of your last 40 navigation destinations display here. You can select any option from the list to select it as your destination.	
	Delete All	Select this option to remove all previous destinations.
Home	Select to navigate to your set Home destination. The time it takes to travel from your current location to Home displays. To set your Home, press:	
	Home	A prompt appears asking if you would like to create a favorite for home. Select:
	Yes	Enter a location into the search bar and press:
	Save	
Work	Select to navigate to your set Work destination. The time it takes to travel from your current location to Work displays. To set your Work:	
	Work	A prompt appears asking if you would like to create a favorite for work. Select:
	Yes	Enter a location into the search bar and press:
	Save	
Favorites	Favorites include any location you have previously saved. To add Favorites:	
	Add a Favorite	Select this button and enter a location into the destination bar.
	Search	Select this option to have the system locate the address you have entered.
	Save	Select this button when the address you have entered appears on the screen.
	The address saves as a favorite and you see the favorites screen. You can now select this address from the favorites screen.	
Point of Interest (POI) Categories	POI categories that may display (based on market and vehicle configuration):	

2017 Fiesta (CCT) Canada/United States of America, HE8J 19A321 AB enUSA, Edition date: 201607, Second Printing

Menu Item	Description	
	Food	
	Fuel	
	Hotel	
	ATM	
	See All	Press to view additional categories. Once you have selected a category, follow the menus to find what you are looking for.
	Inside of these categories you can search by:	
	Nearby	
	Along Route	
	Near Destination	
	In a City	

Once you have chosen your destination, press:

Menu Item	Action and Description	
Save	This saves the destination to your favorites.	
Start	This shows you a map of your entire route. You can then choose your route from three different options.	
	Fastest	Uses the fastest moving roads possible.
	Shortest	Uses the shortest distance possible.
	Economical Route	Uses the most fuel-efficient route.
	The time and distance for each route also displays.	
Cancel	On the route screen, you can choose to cancel the current navigation. The system asks for confirmation then returns you to the map mode screen.	

2017 Fiesta (CCT) Canada/United States of America, HE8J 19A321 AB enUSA, Edition date: 201607, Second Printing

Once you have chosen you destination, press:

Menu Item	Action and Description
Start	The system uses a variety of screens and prompts to guide you to your destination. During Route guidance, you can press the maneuver arrow icon on the map if you want the system to repeat route guidance instructions. When the system repeats the last guidance instruction, it updates the distance to the next guidance instruction, since it detects that the vehicle is moving. The navigation map shows your estimated time of arrival, remaining travel time and the distance to your destination. SYNC 3 may not always announce vehicle arrival at the exact point of your destination and you may have to cancel a route manually.

Navigation Menu

In map mode and during active navigation you can access the navigation menu.

During active navigation, touch the bottom of the screen to view the menu and other buttons.

To access the Navigation menu, press:

Button		
Menu		
You can then select:		
Screen View	Full Map	A full screen map displays during navigation.
	Highway Exit Info	Highway exit information displays on the right hand side of the screen during navigation. Points of interest icons display for restaurants, hotels, fuel stations and ATMs when they are present at the exit. You can select the POI icons to receive a listing of specific locations. You can select the POI location as a waypoint or destination if desired.
	Turn List	Only available during an active route. Displays all of the turns on the current route. You can choose to avoid any road on the turn list by selecting the road from the list. A screen then appears and you can press:
		Avoid
		The system calculates a new route and displays a new turn list.

2017 Fiesta (CCT) Canada/United States of America, HE8J 19A321 AB enUSA, Edition date: 201607, Second Printing

Button		
Traffic List	You can find the SiriusXM Traffic and Travel Link information by pressing this button. This information requires an active subscription to SiriusXM Traffic and Travel Link. When a route is not active, a list of nearby traffic incidents displays (if any are present). When a route is active, you can choose to display a list of traffic nearby or on the route.	
Navigation Settings	Press this button to adjust your preferences. See **Settings** (page 367).	
Where Am I?	Provides your current location city and the nearest road.	
The following are only available on the menu during an active navigation route:		
Cancel Route	The system asks for confirmation and then returns you to the map mode screen.	
Mute Guidance	Selecting this option switches off the audio navigation guidance. Press the button again to un-mute guidance.	
View Route	Press this to see a map of the full route.	
Detour	An alternate route displays in comparison with the current route.	
Edit Waypoints	Only available if you have an active waypoint on your route. See **Waypoints** later in this section for information on how to set waypoints.	
	Use this button to re-order or remove your waypoints.	
	You can also have the system set the order for you by pressing:	Optimize Order
	To return to your route press:	Go

Waypoints

You can add a waypoint to a navigation route as a destination along your route.

To add a waypoint:

1. Select the search icon (magnifying glass) while on an active route. This brings up the destination menu.

2017 Fiesta (CCT) Canada/United States of America, HE8J 19A321 AB enUSA, Edition date: 201607, Second Printing

2. Set your destination using any of the given methods. Once the destination has been selected, the screen allows you to set the destination as a waypoint by selecting:

Menu Item	
Add Waypoint	The waypoint list then appears and you are able to re-order all of your waypoints by selecting the menu icon on the right hand side of the location. You can select up to five waypoints.
You can also have the system set the order for you by pressing:	Optimize Order
To return to your route, press:	Go

cityseeker (If Equipped)

Note: *cityseeker point of interest (POI) information is limited to approximately 1,110 cities (1,049 in the United States, 36 in Canada and 15 in Mexico).*

E225487

cityseeker, when available, is a service that provides more information about certain points of interest such as restaurants, hotels and attractions.

When you have selected a point of interest, the location and information appear, such as address, phone number and a star rating.

Press **More Information** to see a photo, a review, a list of services and facilities, the average room or meal price and the web address. This screen displays the point of interest icons.

For restaurants, cityseeker can provide information such as star rating, average cost, review, handicap access, hours of operation, and website address.

For hotels, cityseeker can provide information such as star rating, price category, review, check-in and checkout times, hotel service icons and website address. Hotel service icons include:

- Restaurant
- Business center
- Handicap facilities
- Laundry
- Refrigerator
- 24 hour room service
- Fitness center
- Internet access
- Pool
- Wi-Fi

Attractions include nearby landmarks, amusement parks, historic buildings and more. cityseeker can provide information such as star rating, reviews, hour of operation and admission price.

2017 Fiesta (CCT) Canada/United States of America, HE8J 19A321 AB enUSA, Edition date: 201607, Second Printing

SiriusXM Traffic and Travel Link

SiriusXM Traffic and Travel Link is available on vehicles equipped with navigation and only in select markets. You must activate and subscribe to receive SiriusXM Traffic and Travel Link information. It helps you locate the best gas prices, find movie listings, get current traffic alerts, view the weather map, get accurate ski conditions and see current sports scores. See **Apps** (page 364).

The system calculates a reasonable efficient route based on available speed limits, traffic, and road conditions. You may know a local short cut that is more efficient at a given time than the route provided by SYNC 3, but you should expect a slight difference in minutes or miles with the SYNC 3 route.

Navigation Map Updates

Annual navigation map updates are available for purchase through your dealership, by calling 1-866-462-8837 in the United States and Canada or 01-800-557-5539 in Mexico. You can also visit:

Website
www.navigation.com/sync

You need to specify the make and model of your vehicle to determine if there is an update available.

HERE is the digital map provider for the navigation application. If you find map data errors, you may report them directly to HERE by going to www.here.com/mapcreator. HERE evaluates all reported map errors and responds with the result of their investigation by e-mail.

Map coverage includes the USA (including Puerto Rico and the US Virgin Islands), Canada and Mexico.

APPS

The system enables voice, steering wheel, and touch screen control of SYNC 3 AppLink enabled smartphone apps.

Once an app is running through AppLink, you can control main features of the app through voice commands and steering wheel controls.

Note: *Available AppLink enabled apps will vary by market.*

Note: *You must pair and connect your smartphone via Bluetooth to SYNC 3 to access AppLink.*

Note: *iPhone users need to connect the phone to the USB port.*

Note: *For information on available apps, supported smartphone devices and troubleshooting tips please visit:*

Websites
owner.ford.com www.syncmyride.ca www.syncmaroute.ca

Note: *Make sure you have an active account for the app that you have downloaded. Some apps will work automatically with no setup. Other apps will want you to configure your personal settings and personalize your experience by creating stations or favorites.We recommend you do this at home or outside of your vehicle.*

Note: *We encourage you to review the smartphone app's terms of service and privacy policies because Ford is not responsible for your app or its use of data.*

2017 Fiesta (CCT) Canada/United States of America, HE8J 19A321 AB enUSA, Edition date: 201607, Second Printing

Note: *AppLink is a native SYNC system feature. Accessing mobile apps through AppLink is only possible when Android Auto or Apple CarPlay are disabled. Some apps may only be accessible in the car through AppLink and others only through Android Auto or Apple CarPlay. Please refer to the Smartphone Connectivity information to disable Android Auto or Apple CarPlay.*

Note: *In order to use an app with SYNC 3, the app needs to be running in the background of your phone. If you shut down the app on your phone, it shuts down the app on SYNC 3 as well.*

Note: *If a SYNC 3 AppLink compatible app is not shown in the Apps Domain, make sure the required app is running on the mobile device.*

Menu Item	Action and Description
Find Mobile Apps	SYNC 3 will search and connect to compatible app(s) running on your mobile device.

Enabling SYNC 3 Mobile Apps

In order to enable mobile apps, SYNC 3 requires user consent to send and receive app authorization information and updates using the data plan associated with the connected device.

The connected device sends data to Ford in the United States. The information is encrypted and includes your VIN, SYNC 3 module number, odometer, usage statistics and debugging information. We retain this data for only as long as necessary to provide this service, troubleshoot, and improve products and services and to offer you products and services that may interest you where allowed by law.

Note: *You must enable mobile apps for each connected device the first time you select a mobile app using the system.*

Note: *Ford reserves the right to limit functionality or deactivate mobile apps at any time.*

Note: *Standard data rates apply. Ford is not responsible for any additional charges you may receive from your service provider, when your vehicle sends or receives data through the connected device. This includes any additional charges incurred due to driving in areas when roaming out of a home network.*

You can enable and disable apps through settings. See **Settings** (page 367).

App Permissions

The system organizes the App permissions into groups. You can grant these group permissions individually. You can change a permission group status any time when not driving, by using the settings menu. While in the settings menu, you can also see the data included in each group.

When you launch an app using SYNC 3, the system may ask you to grant certain permissions, for example Vehicle information, Driving characteristics, GPS and Speed, and/or Push notifications. You can enable all groups or none of them during the initial app permissions prompts. The settings menu offers individual group permission control.

Note: *You are only prompted to grant permissions the first time you use an app with SYNC 3.*

Note: *If you disable group permissions, apps will still be enabled to work with SYNC 3 unless you deactivate All Apps in the settings menu.*

2017 Fiesta (CCT) Canada/United States of America, HE8J 19A321 AB enUSA, Edition date: 201607, Second Printing

SiriusXM Traffic and Travel Link (If Equipped)

WARNING

Driving while distracted can result in loss of vehicle control, crash and injury. We strongly recommend that you use extreme caution when using any device that may take your focus off the road. Your primary responsibility is the safe operation of your vehicle. We recommend against the use of any hand-held device while driving and encourage the use of voice-operated systems when possible. Make sure you are aware of all applicable local laws that may affect the use of electronic devices while driving.

Note: *SiriusXM Traffic and Travel Link may not be available in all markets.*

Note: *In order to use SiriusXM Traffic and Travel Link, your vehicle must have navigation.*

Note: *A paid subscription is required to access and use these features. Go to www.siriusxm.com/travellink for more information.*

Note: *Visit www.siriusxm.com/traffic and click on Coverage map and details for a complete listing of all traffic areas covered by SiriusXM Traffic and Travel Link.*

Note: *Neither Sirius nor Ford is responsible for any errors or inaccuracies in the SiriusXM Traffic and Travel Link services or its use in vehicles.*

When you subscribe to SiriusXM Traffic and Travel Link, it can help you locate the best gas prices, find movie listings, get current traffic alerts, view the current weather map, get accurate ski conditions and see scores to current sports games.

Menu Item	Action and Description	
Traffic on Route	Touch these buttons to identify traffic incidents on your route, near your vehicle's current location or near any of your favorite places, if programmed.	
Traffic Nearby		
Fuel Prices	Touch this button to view fuel prices at stations close to your vehicle's location or on an active navigation route.	
Movie Listings	Touch this button to view nearby movie theaters and their show times, if available.	
Weather	Touch this button to view the nearby weather, current weather, or the five-day forecast for the chosen area.	
	Map	Select to see the weather map, which can show storms, radar information, charts and winds.

2017 Fiesta (CCT) Canada/United States of America, HE8J 19A321 AB enUSA, Edition date: 201607, Second Printing

Menu Item	Action and Description	
	Area	Select to choose from a listing of weather locations.
Sports Info	Touch this button to view scores and schedules from a variety of sports. You can also save up to 10 favorite teams for easier access. The score automatically refreshes when a game is in progress.	
Ski Conditions	Touch this button to view ski conditions for a specific area.	

SETTINGS

Under this menu, you can access and adjust the settings for many of the system features. To access additional settings, swipe the screen left or right.

Sound

Pressing this button allows you to adjust the following:

Sound Settings	
Reset All	Returns Treble, Midrange, and Bass sound settings to factory levels.
Treble	Adjusts the high frequency level.
Midrange	Adjusts the middle frequency level.
Bass	Adjusts the low frequency level.
Balance / Fade	Adjusts the sound ratio from side to side or front to back.
Speed Compensated Vol.	Adjusts the amount the audio system volume increases with speed, or turns the feature off.
Occupancy Mode	Optimizes the sound based on the location of the listeners.
Sound Settings	Stereo
	Surround

Your vehicle might not have all of these features.

2017 Fiesta (CCT) Canada/United States of America, HE8J 19A321 AB enUSA, Edition date: 201607, Second Printing

Media Player

This button is available when a media device such as a Bluetooth Stereo or USB device is the active audio source. Pressing the button allows you to access the following options for active devices only.

Menu Item	Action and Description		
Podcast Speed	For some USB devices, SYNC 3 can adjust the playback speed of podcasts. When a podcast is playing, you can choose:		
	Slower	Normal	Faster
Audiobook Speed	For some USB devices, SYNC 3 can adjust the playback speed of audiobooks. When an audiobook is playing, you can choose:		
	Slower	Normal	Faster
Cover Art Priority	Media Player	Cover art displays from your device's music files. If no cover art for the files exists on the device, then the Gracenote Database provides cover art.	
	Gracenote®	The Gracenote Database supplied cover art is used for your music files. This overrides any cover art from your device.	
Gracenote® Management	Switches on and off Gracenote® to provide metadata information such as genre, artist, album.		
Gracenote® Database Info	This allows you to view the version level of the Gracenote Database.		
Device Information	This allows you to view the manufacturer and model number of your media device.		
Update Media Index	Erase the stored in media information in order to re-index.		

Clock

To adjust the time, select the up and down arrows on either side of the screen. The arrows on the left adjust the hour and arrows on the right adjust the minute. You can then select AM or PM.

You can adjust the following features:

2017 Fiesta (CCT) Canada/United States of America, HE8J 19A321 AB enUSA, Edition date: 201607, Second Printing

Menu Item	Action and Description
Clock Format	Select how time displays.
Auto Time Zone Update	When active, the clock adjusts to time zone changes. This feature is only available in vehicles with navigation.
Reset Clock to GPS Time	When selected, the vehicle clock resets to GPS satellite time.

The system automatically saves any updates you make to the settings.

Bluetooth

Pressing this button allows you to access the following:

Menu Item	Action
Bluetooth	Turning Bluetooth off disconnects all devices and does not permit new connections.

You must activate Bluetooth to pair a Bluetooth-enabled device.

The processes of pairing a Bluetooth device is the same as pairing a phone. **See Pairing a Device** in Phone settings for how to pair a device and the available options.

Phone

Pair your Bluetooth-enabled phone with the system before using the functions in hands-free mode.

Switch on Bluetooth on your device to begin pairing. See your phone's manual if necessary.

To add a phone, select:

Menu Item
Add Phone

1. Follow the on-screen instructions.
2. A prompt alerts you to search for the system on your phone.
3. Select your vehicle's make and model as it displays on your phone.
4. Confirm that the six-digit number appearing on your phone matches the six-digit number on the touchscreen.
5. The touchscreen indicates when the pairing is successful.
6. Your phone may prompt you to give the system permission to access information. To check your phone's compatibility, see your phone's manual or visit the website.

Alternatively, to add a phone, select:

Menu Item
Add Phone
Then select:
Discover Other Bluetooth Devices

1. Follow the on-screen instructions.
2. Select your phone's name when it appears on the touchscreen.

2017 Fiesta (CCT) Canada/United States of America, HE8J 19A321 AB enUSA, Edition date: 201607, Second Printing

3. Confirm that the six-digit number appearing on your phone matches the six-digit number on the touchscreen.
4. The touchscreen indicates when the pairing is successful.
5. Your phone may prompt you to give the system permission to access information. To check your phone's compatibility, see your phone's manual or visit the website.

Other features, such as text messaging using Bluetooth and automatic phonebook download, are phone-dependent features.

To check your phone's compatibility, see your phone's manual or visit the website:

Website
owner.ford.com www.syncmyride.ca www.syncmaroute.ca

Once you have paired a device you can adjust the following options.

Menu Item	Action and Description
View Devices	
You can then select:	
Add a Bluetooth Device	You can add a Bluetooth-enabled device by following the steps in the previous table.
You can select a phone by touching the name of the phone on the screen. You then have the following options:	
Connect	Depending on the status of the device, you can select either of these options to interact with the selected device.
Disconnect	
Make Primary	Allows you to select this device to be your preferred device.
Delete	Removes the selected device from the system.

Pressing the info icon next to the device name allows you to see phone and device information

Menu Item	Action and Description
Manage Contacts	
You can then select:	
Auto-Download Contacts	Enable this option to have SYNC 3 periodically re-download your phonebook to keep your contact list up to date.
Sort By:	Choose how you would like the system to display your contacts. You can choose:

2017 Fiesta (CCT) Canada/United States of America, HE8J 19A321 AB enUSA, Edition date: 201607, Second Printing

Menu Item	Action and Description	
	First Name	Last Name
Re-download Contacts	Select this option to re-download your contact list manually.	
Delete Contacts	Select this option to delete the in vehicle contact list. Deleting the in vehicle list does not erase the contact list on the connected phone.	

Menu Item	Action and Description
Set Phone Ringtone	
You can then select:	
No Ringtone	No sound plays when a call comes to your phone.
Use Phone Ringtone	The currently selected ringtone on your phone plays when you receive a call. This option may not be available for all phones. If this option is available, it is the default setting.
You can also select one of the three available ringers.	

Menu Item	Action and Description
Text Messaging	
You can then select:	
No Alert (Silence)	No sound plays when a message comes to your phone.
You can select one of the three available notification sounds.	
Voice Readout	When enabled, a voice prompt alerts you when you receive a new message.

2017 Fiesta (CCT) Canada/United States of America, HE8J 19A321 AB enUSA, Edition date: 201607, Second Printing

You can enable and disable the following options as well:

Menu Item	Action and Description
Mute Audio in Privacy	When enabled, vehicle audio (such as radio or apps) is muted for the duration of the phone call even when the phone call is in privacy.
Roaming Warning	When enabled, an alert displays that your phone is roaming when you attempt to place a call.
Low Battery Notification	When enabled, a message displays when the battery on your phone is running low.

911 Assist

Note: *This service is only available in the United States and Canada.*

Select this button to modify the on or off setting for this feature. If the mobile phone's contacts have been downloaded, you can adjust the following option:

Menu Item	Action and Description
Set Emergency Contacts	You can select up to two numbers from your mobile device's phone-book as emergency contacts for quick access at the end of the 911 Assist call process.

Radio

This button is available if a Radio source such as AM or FM is the active media source. Pressing the button allows you to access the following features:

2017 Fiesta (CCT) Canada/United States of America, HE8J 19A321 AB enUSA, Edition date: 201607, Second Printing

Menu Item	Action and Description
FM HD Radio AM HD Radio (Dependent on current radio source, If Available)	Activation of this feature allows you to listen to HD radio broadcasts.
Radio Text	This feature is available when FM Radio is your active media source. Activate this feature to have the system display radio text.
Autoset Presets (AST)	Refresh
	Selecting this option stores the six strongest stations in your current location to the last preset bank of the currently tuned source.

Navigation

You can adjust many of the Navigation preferences by selecting the following menus.

Map Preferences

Menu Item	Action and Description	
Map Preferences		
Then select any of the following:		
3D City Model	When this option is active, the system shows 3D renderings of buildings.	
Breadcrumbs	When enabled, your vehicle's previously traveled route displays with white dots.	
POI Icons	Enable this feature to display up to 3 POI icons on the navigation map. A rest area POI icon may display on the map regardless of this setting.	
	Once this feature is activated you can select the icons you want displayed by selecting:	Select POIs
Incident Map Icons	This menu allows you to choose which incident icons you would like to have displayed on the navigation map.	

2017 Fiesta (CCT) Canada/United States of America, HE8J 19A321 AB enUSA, Edition date: 201607, Second Printing

Route Preferences

Menu Item	Second Level Messages, Actions and Descriptions		
Route Preferences			
Then select any of the following:			
Preferred Route	Choose to have the system display your chosen route type.		
	Shortest	Fastest	Eco
Always Use ___ Route	Bypass route selection in destination programming. The system only calculates one route based on your preferred route setting. When activated, the system uses your selected route type to calculate only one route to the desired destination.		
Use HOV Lanes	The system selects High Occupancy Vehicle or car pool lanes when providing route guidance.		
Automatically Find Parking	The system searches for and displays available parking locations as you approach your destination.		
Eco Time Penalty	Select a level of cost for the calculated Eco Route. The higher the setting, the longer the time allotment is for the route.		
Dynamic Route Guidance	Enable or disable considering traffic information when planning a route. The system can find a faster route based on heavy traffic flow information or detect a Road Closed incident and find a detour route if possible.		
Avoid Freeways	If selected, SYNC 3 avoids freeways when computing a navigation route.		
Avoid Toll Roads	If selected, SYNC 3 avoids Toll Roads when computing a navigation route.		
Avoid Ferries/Car Trains	If selected, SYNC 3 avoids the use of Ferries or Trains when computing a navigation route.		

2017 Fiesta (CCT) Canada/United States of America, HE8J 19A321 AB enUSA, Edition date: 201607, Second Printing

Navigation Preferences

Menu Item	Action and Description
Navigation Preferences	
Guidance Prompts	You can adjust how the system provides prompts.
Then select any of the following:	
Voice and Tones	A tone sounds followed by voice instructions.
Voice Only	Only voice instructions are given.
Tones Only	Only a tone sounds to prompt you.

Mobile Apps

You can enable the control of compatible mobile apps running on your Bluetooth or USB device on SYNC 3. In order to enable mobile apps, SYNC 3 requires user consent to send and receive app authorization information and updates using the data plan associated with the connected device.

The connected devices sends data to Ford in the United States. The encrypted information includes your VIN, SYNC 3 module number, anonymous usage statistics and debugging information. Updates may take place automatically.

Note: *All Mobile Apps may not be compatible with the system.*

Note: *Standard data rates will apply. Ford is not responsible for any additional charges you may receive from your service provider, when your vehicle sends or receives data through the connected device. This includes any additional charges incurred due to driving in areas when roaming out of a home network.*

Menu Item	Action and Description
Mobile Apps	Enable or disable the use of mobile apps on SYNC 3. Disabling mobile apps in the settings menu disables automatic updates and the use of mobile apps on SYNC 3.
	You can view the status of mobile app permissions in the settings menu.
Once Mobile Apps is enabled, you have the following options:	
Update Mobile Apps	This provides information on the current state of available app updates.
	There are three possible statuses:

2017 Fiesta (CCT) Canada/United States of America, HE8J 19A321 AB enUSA, Edition date: 201607, Second Printing

Menu Item	Action and Description		
	Update Needed	Up-To-Date	Updating Mobile Apps...
	The system has detected a new app requiring authorization or a general permissions update is required.	No update is required.	The system is trying to receive an update.
	Request Update		Select this button if an update is required and you want to request this update manually. For example, when your mobile device is connected to a Wi-Fi hotspot, select:
			Request Update
All Apps	Grant or deny permissions to all apps at once.		
There may also be SYNC 3 enabled apps listed under these options.	Grant or deny an individual app particular permissions. App permissions are organized into groups. By pressing the info book icon, you can see which signals are included in each group.		

Note: *Ford is not responsible or liable for any damages or loss of privacy relating to usage of an app, or dissemination of any vehicle data that you approve Ford to provide to an app.*

General

Access and adjust the system settings, voice features, as well as phone, navigation and wireless settings.

Menu Item	
Language	Select to have the touchscreen display in English, Spanish or French.
Distance	Select to display units in kilometers or miles.
Temperature	Select to display units in Celsius or Fahrenheit.
Touch Screen Beep	Select to have the system beep to confirm choices made through the touchscreen.

2017 Fiesta (CCT) Canada/United States of America, HE8J 19A321 AB enUSA, Edition date: 201607, Second Printing

Menu Item	
Automatic System Updates	When you activate this option, the system automatically updates when you have an available Internet connection through a Wi-Fi network or mobile connection.
About SYNC	Information pertaining to the system and its software.
Software Licenses	Documentation of the software license for the system.
Master Reset	Select to restore factory defaults. This erases all personal settings and personal data.

Wi-Fi

You can adjust the following:

Menu Item	Action and Description
Wi-Fi	Enable this option to connect to Wi-Fi for SYNC 3 vehicle software updates.
Available Networks	This provides you with a list of available Wi-Fi networks within range.
	Clicking on a network from the list allows you to connect or disconnect from that network. The system may require a security code to connect.
	When you click the information button next to a network, more information about the network displays such as the signal strength, connection status and security type.
Wi-Fi Available Notifications	The system alerts you when your vehicle is parked and a Wi-Fi network is within range if SYNC is not already connected.

Ambient Lighting (If Equipped)

Tap a color once to active ambient lighting. This sets the color to the highest intensity.

You can drag the colors up and down to increase or decrease the intensity.

To switch ambient lighting off, press the active color once or drag the active color all the way down to zero intensity.

Vehicle

Note: *Your vehicle may not have all of these features.*

You can select the following features to update their settings.

2017 Fiesta (CCT) Canada/United States of America, HE8J 19A321 AB enUSA, Edition date: 201607, Second Printing

Door Keypad Code

Select this button to add or erase a personal door keypad code. To add or erase a personal code, you first need to enter the five-digit factory set code. You can find this code on the owner's wallet card in the glove box or from your authorized dealer.

Camera Settings

To make adjustments using the touchscreen, select:

Message	Action and Description
Camera Settings	
Then select from the following:	
Rear Camera Delay	You can enable or disable this option using the slider.

You can find more information on the rear-view camera system in the parking aids chapter of your owner manual.

Onboard Modem Serial Number (ESN)

Selecting this button on the settings menu shows you the ESN number for your system. You need this number for certain registrations such as Satellite Radio.

Display

To make adjustments using the touchscreen, select:

Menu Item	Action and Description	
Display Off	The screen goes black and does not display anything. To switch the screen back on, simply tap the screen.	
Brightness	Make the screen display brighter or dimmer.	
Mode	You can select:	
	Auto	The screen automatically switches between day and night modes based on the outside light level.

2017 Fiesta (CCT) Canada/United States of America, HE8J 19A321 AB enUSA, Edition date: 201607, Second Printing

Menu Item	Action and Description	
	Day	The screen displays with a light background to enhance daytime viewing.
	Night	The screen displays with a darker background to make nighttime viewing easier.
Auto Dim	Enable this option to automatically dim the display brightness based on ambient lighting conditions.	

Voice Control

You can adjust the voice control settings by selecting the following options.

Menu Item	
Advanced Mode	Enable this option to remove additional voice prompts and confirmations.
Phone Confirmation	Enable this option to have the system confirm a contacts name with you before making a call.
Voice Command List	Enable this option to have the system display a list of available voice commands when the voice button is pressed.

Valet Mode

Valet mode allows you to lock the system. No information is accessible until the system is unlocked with the correct PIN.

When you select valet mode a pop up appears informing you that a four digit code must be entered to enable and disable valet mode. You can use any PIN you chose but you must use the same PIN to disable valet mode. The system asks you to input the code.

Note: *If the system is locked and you cannot remember the PIN, please contact the Customer Relationship Center.*

United States: 1-800-392-3673
Canada: 1-800-565-3673

To enable valet mode, enter your chosen PIN. The system then asks to confirm your PIN by reentering it. The system then locks.

To unlock the system, enter the same pin number. The system reconnects to your phone and all of your options are available again.

SYNC™ 3 TROUBLESHOOTING

Your SYNC 3 system is easy to use. However, should questions arise, please refer to the tables below.

To check your cell phone's compatibility, visit the Ford website.

2017 Fiesta (CCT) Canada/United States of America, HE8J 19A321 AB enUSA, Edition date: 201607, Second Printing

Website
owner.ford.com

Website
www.syncmyride.ca www.syncmaroute.ca

Cell phone issues		
Issue	**Possible cause**	**Possible solution**
There is background noise during a phone call.	The audio control settings on your cell phone may be affecting SYNC 3 performance.	Refer to your device's manual about audio adjustments.
During a call, I can hear the other person but they cannot hear me.	Possible cell phone malfunction.	Try switching your cell phone off, resetting it or removing the battery, then try again.
		Make sure that the microphone for SYNC 3 is not set to off. Look for the microphone icon on the phone screen.
During a call, I cannot hear the other person and they cannot hear me.	The system may need to be restarted.	To restart your system, shut down the engine, open and close the door, and then lock the door and wait for 2-3 minutes. Make sure that your SYNC 3 screen is black and the lighted USB port is off.
SYNC 3 is not able to download my phonebook.	This is a cell phone-dependent feature.	Check your cell phone's compatibility.
	Possible cell phone malfunction.	Make sure you allow SYNC 3 to retrieve contacts from your phone. Refer to your cell manual.
		You must switch on your cell phone and the automatic phonebook download feature on SYNC 3.
		Try switching your cell phone off, resetting it or removing the battery, then try again.
The system says "Phonebook downloaded" but my SYNC 3 phonebook is empty or is missing contacts.	Limitations on your cell phone's capability.	Make sure you allow SYNC 3 to retrieve contacts from your phone. Refer to your cell manual.
		If the missing contacts are stored on your SIM card, move them to your cell phone's memory.

2017 Fiesta (CCT) Canada/United States of America, HE8J 19A321 AB enUSA, Edition date: 201607, Second Printing

Cell phone issues		
Issue	**Possible cause**	**Possible solution**
		You must switch on your cell phone and the automatic phonebook download feature on SYNC 3.
I am having trouble connecting my cell phone to SYNC 3.	This is a cell phone-dependent feature.	Check your cell phone's compatibility.
	Possible cell phone malfunction.	Try switching your cell phone off, resetting it or removing the battery, then try again.
		Try deleting your device from SYNC 3 and deleting SYNC from your device, then trying again.
		Always check the security and auto accept prompt settings relative to the SYNC 3 Bluetooth connection on your cell phone.
		Update your cell phone's firmware.
		Switch the auto download setting off.
Text messaging is not working on SYNC 3.	This is a cell phone-dependent feature.	Check your cell phone's compatibility.
	Possible cell phone malfunction.	Try switching your cell phone off, resetting it or removing the battery, then try again.
	iPhone	• Go to your cell phone's Settings. • Go to the Bluetooth Menu. • Press the blue circle to the right of the device named with your vehicle make and model to enter the next menu. • Turn Show Notifications on. • Disconnect then reconnect your iPhone from the SYNC 3 system to activate this settings update. Your iPhone is now set up to forward incoming text messages to SYNC 3. Repeat these steps for every other SYNC 3 vehicle that you connect. Your iPhone will only forward incoming text messages to SYNC 3 if the iPhone is not unlocked in the messaging application.

2017 Fiesta (CCT) Canada/United States of America, HE8J 19A321 AB enUSA, Edition date: 201607, Second Printing

Cell phone issues		
Issue	**Possible cause**	**Possible solution**
		Replying to text messages using SYNC 3 is not supported by iPhone. Text messages from WhatsApp and Facebook Messenger are not supported.
Audible text messages do not work on my cell phone.	This is a cell phone-dependent feature.	Your cell phone must support downloading text messages through Bluetooth to receive incoming text messages.
	This is a cell phone limitation.	Because each cell phone is different, refer to your device's manual for the specific cell phone you are pairing. In fact, there can be differences between cell phones due to brand, model, service provider and software version.

USB and Bluetooth Stereo issues		
Issue	**Possible cause**	**Possible solution**
I am having trouble connecting my device.	Possible device malfunction.	Disconnect the device from SYNC 3. Try switching your device off, resetting it or removing the battery, then reconnect it to SYNC 3.
		Make sure you are using the manufacturer's cable.
		Make sure to correctly insert the USB cable into the device and your vehicle's USB port.
		Make sure that the device does not have an auto-install program or active security settings.
	The device has a lock screen enabled.	Make sure your device is unlocked before connecting it to SYNC 3.
SYNC 3 does not recognize my device when I start my vehicle.	This is a device limitation.	Make sure you are not leaving the device in your vehicle during very hot or cold temperatures.

2017 Fiesta (CCT) Canada/United States of America, HE8J 19A321 AB enUSA, Edition date: 201607, Second Printing

USB and Bluetooth Stereo issues		
Issue	**Possible cause**	**Possible solution**
Bluetooth audio does not stream.	This is a device-dependent feature.	Make sure you connect the device to SYNC 3 and that you have started the media player on your device.
	The device is not connected.	
SYNC 3 does not recognize music that is on my device.	Your music files may not contain the correct artist, song title, album or genre information.	Make sure that all song details are populated.
	The file may be corrupted.	Try replacing the corrupt file with a new version.
	The song may have copyright protection that does not allow it to play.	Some devices require you to change the USB settings from mass storage to media transfer protocol class.
	The file format is not supported by SYNC 3.	Convert the file to a supported format. See **Entertainment** (page 341).
	The device needs to be re-indexed.	Update media index. See **Settings** (page 367).
	The device has a lock screen enabled.	Make sure your device is unlocked before connecting it to SYNC 3.
When I connect my device, I sometimes do not hear any sound.	This is a device limitation.	Disconnect the device from SYNC 3. Try switching your device off, resetting it or removing the battery, then connect it back to SYNC 3.
		To listen to Apple devices through USB, select AirPlay from the devices Control Center, then select Dock Connector.
		To listen to Apple devices through Bluetooth Stereo, select AirPlay from the devices Control Center, then select SYNC.

2017 Fiesta (CCT) Canada/United States of America, HE8J 19A321 AB enUSA, Edition date: 201607, Second Printing

Wi-Fi Issues		
Issue	**Possible cause**	**Possible solution**
Failed connection.	Password error.	Verify password.
	Weak signal.	Check for a poor Wi-Fi signal.
	Multiple Access points within range with the same SSID.	Use a unique name for your SSID, don't use the default name unless it contains a unique identifier, such as part of the MAC address.
Disconnecting after successful connection.	Weak signal probably due to distance from the hotspot, obstruction or high interference.	Position the vehicle close to the hotspot with the front of the vehicle facing the hotspot direction and remove obstacles if possible. Other Wi-Fi, Bluetooth, microwave and cordless phones may cause interference.
Poor signal seen by SYNC 3 despite being near a hotspot.	There may be an obstruction between SYNC 3 and the hotspot.	If the vehicle is equipped with heated windshield, try positioning the vehicle so that the windshield is not facing the hotspot. If you have metallic window tinting but not on the windshield, position the vehicle to face the hotspot. If all windows are tinted, you can open the windows in the direction of the hotspot if that is feasible. Try to remove other obstructions that may impact signal quality such as opening the garage door.
A hotspot is not listed in the list of available networks.	The hotspot was defined as a hidden network.	Please set the network to visible and try again.

2017 Fiesta (CCT) Canada/United States of America, HE8J 19A321 AB enUSA, Edition date: 201607, Second Printing

Wi-Fi Issues		
Issue	**Possible cause**	**Possible solution**
SYNC 3 is not seen when searching for Wi-Fi networks from your phone or other devices.	SYNC 3 does not currently provide a hotspot.	SYNC 3 currently does not provide a hotspot
Software download takes too long.	Poor signal strength, too far from the hotspot, hotspot is supporting multiple connections, slow Internet connection or other problems.	Check the signal quality (under network details), if SYNC 3 indicates good or excellent, test with another high-speed equipped hotspot where the environment is more predictable.
SYNC 3 seems to connect with a hotspot and the signal strength is excellent but the software is not being updated.	It is possible that there is no new software. The connected hotspot may be a managed one and it requires either a subscription or agreeing to the terms and conditions.	Test the connection with another device, if the hotspot requires a subscription, you may contact the service provider.

AppLink issues		
Issue	**Possible cause(s)**	**Possible solution(s)**
AppLink Mobile Applications: When I select "Connect Mobile Apps," SYNC 3 does not find any applications.	You did not connect an Applink Compatible phone to SYNC 3.	Make sure you have a compatible smartphone; an Android with OS 2.3 or higher or an iPhone 3GS or newer with iOS 5.0 or higher. Additionally, make sure you pair and connect your phone

2017 Fiesta (CCT) Canada/United States of America, HE8J 19A321 AB enUSA, Edition date: 201607, Second Printing

AppLink issues		
Issue	**Possible cause(s)**	**Possible solution(s)**
		to SYNC 3 in order to find AppLink-capable apps on your device. iPhone users must also connect to a USB port with an Apple USB cable.
My phone is connected, but I still cannot find any apps.	AppLink-enabled apps are not installed and running on your mobile device.	Make sure you have downloaded and installed the latest version of the app from your phone's app store. Make sure the app is running on your phone. Some apps require you to register or login to the app on the phone before using them with AppLink. Also, some may have a "Ford SYNC" setting, so check the app's settings menu on the phone.
My phone is connected, my app(s) are running, but I still cannot find any apps.	Sometimes apps do not properly close and re-open their connection to SYNC 3, over ignition cycles, for example.	Closing and restarting apps may help SYNC 3 find the application if you cannot discover it inside the vehicle. On an Android device, if apps have an 'Exit' or 'Quit' option, then select it and restart the app. If the app does not have that option, select the phone's settings menu and select 'Apps', then find the particular app and choose 'Force stop.' Do not forget to restart the app afterward, then select "Connect Mobile Apps" on SYNC 3.

2017 Fiesta (CCT) Canada/United States of America, HE8J 19A321 AB enUSA, Edition date: 201607, Second Printing

AppLink issues		
Issue	**Possible cause(s)**	**Possible solution(s)**
		On an iPhone with iOS7+, to force close an app, double tap the home button then swipe up on the app to close it. Tap the home button again, then select the app again to restart it. After a few seconds, the app should then appear in SYNC 3's Mobile App's Menu.
My Android phone is connected, my app(s) are running, I restarted them, but I still cannot find any apps.	There is a Bluetooth issue on some older versions of the Android operating system that may cause apps that were found on your previous vehicle drive to not be found again if you did not switch Bluetooth off.	Switch Bluetooth off and then on to reset it on your phone. If you are in your vehicle, SYNC 3 should be able to automatically re-connect to your phone if you press the "Phone" button.

2017 Fiesta (CCT) Canada/United States of America, HE8J 19A321 AB enUSA, Edition date: 201607, Second Printing

AppLink issues		
Issue	**Possible cause(s)**	**Possible solution(s)**
My iPhone is connected, my app is running, I restarted the app but I still cannot find it on SYNC 3.	You may need to reset the USB connection to SYNC 3.	Unplug the USB cable from the phone, wait a moment, and plug the USB cable back in to the phone. After a few seconds, the app should appear in SYNC 3's Mobile Apps Menu. If not, "Force Close" the application and restart it.
I have an Android phone. I found and started my media app on SYNC 3, but there is no sound or the sound is very low.	The Bluetooth volume on the phone may be low.	Increase the Bluetooth volume of the device by using the device's volume control buttons which are most often found on the side of the device.
I can only see some of the AppLink apps running on my phone listed in the SYNC 3 Mobile Apps Menu.	Some Android devices have a limited number of Bluetooth ports that apps can use to connect. If you have more AppLink apps on your phone than the number of available Bluetooth ports, you will not see all of your apps listed in the SYNC 3 mobile apps menu.	Force close or uninstall the apps you do not want SYNC 3 to find. If the app has a "Ford SYNC" setting, disable that setting in the app's settings menu on the phone.

Voice command issues		
Issue	**Possible cause**	**Possible solution**
SYNC 3 does not understand what I am saying.	You may be using the wrong voice commands.	Review the cell phone voice commands and the media voice commands at the beginning of their respective sections.
		Refer to the audio display during an active voice session to find a list of voice commands there.
	You may be speaking too soon or at the wrong time.	Wait for the system to prompt you before you state your command.

2017 Fiesta (CCT) Canada/United States of America, HE8J 19A321 AB enUSA, Edition date: 201607, Second Printing

Voice command issues		
Issue	**Possible cause**	**Possible solution**
SYNC 3 does not understand the name of a song or artist.	You may be using the wrong voice commands.	Review the media voice commands at the beginning of the media section.
	You may not be saying the name exactly as it appears on your device.	Say the song or artist name exactly as it is displayed on your device. For example, say "Play Artist Prince" or "Play song Purple Rain".
		Make sure you are saying the complete title such as "California remix featuring Jennifer Nettles".
		If there are any abbreviations in the name, like ESPN or CNN, you have to spell those: "E-S-P-N" or "C-N-N".
	The song or artist name may have some special characters that are not being recognized by SYNC 3.	Make sure that song titles, artists, album, and playlists names do not have any special characters like *, - or +.
SYNC 3 does not understand or is calling the wrong contact when I want to make a call.	You may not be saying the name exactly as it appears on your phonebook.	Make sure that you are saying the name exactly as it appears on your phone. For example, if your contact is "Joe Wilson", say "Call Joe Wilson". If your contact name is "Mom", say "Call Mom".
	The contact name may contain special characters.	Make sure that your contact names do not have any special characters like *, - or +.
The SYNC 3 voice control system is having trouble recognizing foreign names stored on my cell phone.	You may not be saying the name exactly as it appears on your phonebook.	SYNC 3 applies the phonetic pronunciation rules of the selected language to the contact names stored on your cell phone.
		Helpful Hint: You can select your contact manually. Press **PHONE**. Select the option for phonebook and then contact name. Press the soft-key option to hear it. SYNC 3 will read the contact name to you, giving you some idea of the pronunciation it is expecting.

2017 Fiesta (CCT) Canada/United States of America, HE8J 19A321 AB enUSA, Edition date: 201607, Second Printing

Voice command issues		
Issue	**Possible cause**	**Possible solution**
The SYNC 3 voice control system is having trouble recognizing foreign tracks, artists, albums, genres and playlist names from my media player or USB flash drive.	You may be saying the foreign names using the currently selected language for SYNC 3.	SYNC 3 applies the phonetic pronunciation rules of the selected language to the names stored on your media player or USB flash drive. It is able to make some exceptions for very popular artist names (for example, U2) such that you can always use the English pronunciation for these artists.
The system generates voice prompts and the pronunciation of some words may not be accurate for my language.	SYNC 3 uses text-to-speech voice prompt technology.	SYNC 3 uses a synthetically generated voice rather than pre-recorded human voice.
		SYNC 3 offers several new voice control features for a wide range of languages. Dialing a contact name directly from the phonebook without pre-recording (for example, “call John Smith”) or selecting a track, artist, album, genre or playlist directly from your media player (for example, "play artist Madonna").

2017 Fiesta (CCT) Canada/United States of America, HE8J 19A321 AB enUSA, Edition date: 201607, Second Printing

General		
Issue	**Possible cause**	**Possible solution**
The language selected for the instrument cluster and information and entertainment display does not match the SYNC 3 language (phone, USB, Bluetooth audio, voice control and voice prompts).	SYNC 3 does not support the currently selected language for the instrument cluster and information and entertainment display.	SYNC 3 only supports four languages in a single module for text display, voice control and voice prompts. The country where you bought your vehicle dictates the four languages based on the most popular languages spoken. If the selected language is not available, SYNC 3 remains in the current active language.
		SYNC 3 offers several new voice control features for a wide range of languages. Dialing a contact name directly from the phonebook without pre-recording (for example, “call John Smith”) or selecting a track, artist, album, genre or playlist directly from your media player (for example, "play artist Madonna").

SYNC 3 System Reset
The system has a System Reset feature that can be performed if the function of a SYNC 3 feature is lost. This reset is intended to restore functionality and will not erase any information previously stored in the system (such as paired devices, phonebook, call history, text messages, or user settings). To perform a System Reset, press and hold the Seek Up (>>|) button while pressing and holding the Radio Power button. After approximately 5 seconds the screen will go black. Allow 1-2 minutes for the system reset to complete. You may then resume using the SYNC 3 system.

For additional assistance with SYNC 3 troubleshooting please call or visit the Ford Website.

Ford Support	
Customer Relationship Center	United States: 1-800-392-3673
	Canada: 1-800-565-3673
Website	owner.ford.com www.syncmyride.ca www.syncmaroute.ca

2017 Fiesta (CCT) Canada/United States of America, HE8J 19A321 AB enUSA, Edition date: 201607, Second Printing

For a complete listing of the accessories that are available for your vehicle, please contact your authorized dealer or visit the online store web site:

Web Address (United States)
www.Accessories.Ford.com

Web Address (Canada)
www.Accessories.Ford.ca

Ford Accessories are available for your vehicle through an authorized Ford dealer. Ford Motor Company will repair or replace any properly authorized dealer-installed Ford Original Accessory found to be defective in factory-supplied materials or workmanship during the warranty period, as well as any component damaged by the defective accessories.

Ford Motor Company will warrant your accessory through the warranty that provides the greatest benefit:

- 24 months, unlimited miles.
- The remainder of your new vehicle limited warranty.

Contact an authorized dealer for details and a copy of the warranty.

Exterior style

- Bumper protectors.
- Graphics kit.
- Rear spoiler.
- Side window deflectors.
- Splash guards.
- Vehicle covers.
- Wheels.
- Trim kits*.
- Hood protector*.

Interior style

- All-weather floor mats.
- Ambient lighting.
- Gear shift knob.
- Lighted door sill plates.
- Premium carpeted floor mats.
- Rear seat entertainment*.
- Arm rest*.

Lifestyle

- Ash cup and smokers packages.
- Cargo organization.
- Roof racks and carriers*.
- Tablet cradle*.

Peace of mind

- Bumper-mounted parking sensor*.
- Keyless entry keypad.
- Locking fuel plug.
- Remote start.
- Vehicle security systems.
- Wheel locks.
- Roadside Assistance kits*.

*Ford Licensed Accessory. The accessory manufacturer designs, develops and therefore warrants Ford Licensed Accessories, and does not design or test these accessories to Ford Motor Company engineering requirements. Contact an authorized Ford dealer for the manufacturer's limited warranty details, and request a copy of the Ford Licensed Accessories product limited warranty from the accessory manufacturer.

For maximum vehicle performance, keep the following information in mind when adding accessories, equipment, passengers and luggage to your vehicle:

2017 Fiesta (CCT) Canada/United States of America, HE8J 19A321 AB enUSA, Edition date: 201607, Second Printing

- Do not exceed the total weight capacity of the vehicle or of the front or rear axle (GVWR or GAWR as indicated on the Safety Compliance Certification label). Ask an authorized dealer for specific weight information.
- The Federal Communications Commission (FCC) and Canadian Radio Telecommunications Commission (CRTC) regulate the use of radio transmitter-equipped mobile communications systems, for example, two-way radios, telephones and theft alarms. Any such equipment should comply with Federal Communications Commission (FCC) and Canadian Radio Telecommunications Commission (CRTC) regulations and an authorized dealer should install this equipment.
- An authorized dealer should install mobile communications systems. Improper installation may harm the operation of your vehicle, particularly if their manufacturer did not design the mobile communication system specifically for automotive use.
- If you or an authorized dealer add any non-Ford electrical or electronic accessories or components to your vehicle, you may adversely affect the performance of other electrical systems in the vehicle.

2017 Fiesta (CCT) Canada/United States of America, HE8J 19A321 AB enUSA, Edition date: 201607, Second Printing

PROTECT YOURSELF FROM THE RISING COST OF VEHICLE REPAIRS WITH A FORD PROTECT EXTENDED SERVICE PLAN.

Ford Protect Extended Service Plans (U.S. Only)

Ford Protect extended service plan means peace of mind. It's the extended service plan backed by Ford Motor Company, and provides more protection beyond the New Vehicle Limited Warranty coverage. When you visit your Ford Dealer, Insist on Ford Protect extended service plans!

Ford Protect Can Quickly Pay for Itself

One trip to the Service Center could easily exceed the price of your Ford Protect extended service plan. With Ford Protect extended service plan you minimize your risk for unexpected repair bills and rising repair costs.

Up to 1,000+ Covered Vehicle Components

There are four mechanical Ford Protect extended service plans with different levels of coverage. Ask your authorized dealer for details.

1. PremiumCARE - Our most comprehensive coverage. With over 1,000 covered components, this plan is so complete it's probably easier to list what's not covered.
2. ExtraCARE - Covers 113 components, and includes many high-tech items.
3. BaseCARE - Covers 84 components.
4. PowertrainCARE - Covers 29 critical components.

Ford Protect extended service plans are honored by all authorized Ford dealers in the U.S., Canada and Mexico.

That means you get:

- Reliable, quality service at any Ford or Lincoln dealership.
- Repairs performed by factory trained technicians, using genuine parts.

Rental Car Reimbursement

1st day Rental Benefit

If you bring your car into your dealer for service, we'll give you a loaner to use for the day.

Extended Rental Benefits

If your vehicle is kept overnight for covered repairs, you are eligible for rental car coverage, including warranty repairs, and Field Service Actions.

Roadside Assistance

Exclusive 24/7 roadside assistance, including:

- Towing, flat-tire change and battery jump starts.
- Out of fuel and lock-out assistance.
- Travel expense reimbursement for lodging, meals and rental car.
- Assistance for taxi, shuttle, rental car coverage or other transportation.

Transferable Coverage

If you sell your vehicle before your Ford Protect extended service plan coverage expires, you can transfer any remaining coverage to the new owner. Which should give you and your potential buyer a little more peace of mind.

2017 Fiesta (CCT) Canada/United States of America, HE8J 19A321 AB enUSA, Edition date: 201607, Second Printing

Less Cost to Properly Maintain Your Vehicle

Ford Protect extended service plan also offers a Premium Maintenance Plan that covers all scheduled maintenance, and selected wear items. The coverage is prepaid, so you never have to worry about the cost of your vehicle's maintenance.

Covered maintenance includes:

- Windshield wiper blades.
- Spark plugs.
- The clutch disc (if equipped).
- Brake pads and linings.
- Shock absorbers.
- Struts.
- Engine Belts.
- Engine coolant hoses, clamps and o-rings.
- Diesel exhaust fluid replenishment (if equipped).
- Cabin air filter replacement every 20,000 mi (32,000 km) (electric vehicles only).

Interest Free Finance Options

Just a 10% down payment will provide you with an affordable, no interest, no fee payment program allowing you all the security and benefits Ford Protect extended service plan has to offer while paying over time. You are pre-approved with no credit check or hassles. To learn more, call our Ford Protect extended service plan specialists at 800-367-3377.

Ford Protect Extended Service Plan
P.O. Box 321067
Detroit, MI 48232

Ford Protect Extended Service Plan (CANADA ONLY)

You can get more protection for your vehicle by purchasing a Ford Protect extended service plan. Ford Protect extended service plan is the only service contract backed by Ford Motor Company of Canada, Limited. Depending on the plan you purchase, Ford Protect extended service plan provides benefits such as:

- Rental reimbursement.
- Coverage for certain maintenance and wear items.
- Protection against repair costs after your New Vehicle Limited Warranty Coverage expires.
- Roadside Assistance benefits.

There are several Ford Protect extended service plans available in various time, distance and deductible combinations. Each plan is tailored to fit your own driving needs, including reimbursement for towing and rental. When you purchase Ford Protect extended service plan, you receive added peace-of-mind protection throughout Canada, the United States and Mexico, provided by a network of participating authorized Ford Motor Company dealers.

Note: *Repairs performed outside of Canada, the United States and Mexico are not eligible for Ford Protect extended service plan coverage.*

This information is subject to change. For more information; visit your local Ford of Canada dealer or www.ford.ca to find the Ford Protect extended service plan that is right for you.

2017 Fiesta (CCT) Canada/United States of America, HE8J 19A321 AB enUSA, Edition date: 201607, Second Printing

GENERAL MAINTENANCE INFORMATION

Why Maintain Your Vehicle?

Carefully following the maintenance schedule helps protect against major repair expenses resulting from neglect or inadequate maintenance and may help to increase the value of your vehicle when you sell or trade it. Keep all receipts for completed maintenance with your vehicle.

We have established regular maintenance intervals for your vehicle based upon rigorous testing. It is important that you have your vehicle serviced at the proper times. These intervals serve two purposes; one is to maintain the reliability of your vehicle and the second is to keep your cost of owning your vehicle down.

It is your responsibility to have all scheduled maintenance performed and to make sure that the materials used meet the specifications identified in this owner's manual. See **Capacities and Specifications** (page 243).

Failure to perform scheduled maintenance invalidates warranty coverage on parts affected by the lack of maintenance.

Why Maintain Your Vehicle at Your Dealership?

Factory-Trained Technicians

Service technicians participate in extensive factory-sponsored certification training to help them become experts on the operation of your vehicle. Ask your dealership about the training and certification their technicians have received.

Genuine Ford and Motorcraft Replacement Parts

Dealerships stock Ford, Motorcraft and Ford-authorized branded re-manufactured replacement parts. These parts meet or exceed our specifications. Parts installed at your dealership carry a nationwide 24-month or unlimited mile (kilometer) parts and labor limited warranty.

If you do not use Ford authorized parts they may not meet our specifications and depending on the part, it could affect emissions compliance.

Convenience

Many dealerships have extended evening and Saturday hours to make your service visit more convenient and they offer one stop shopping. They can perform any services that are required on your vehicle, from general maintenance to collision repairs.

Note: *Not all dealers have extended hours or body shops. Please contact your dealer for details.*

Protecting Your Investment

Maintenance is an investment that pays dividends in the form of improved reliability, durability and resale value. To maintain the proper performance of your vehicle and its emission control systems, make sure you have scheduled maintenance performed at the designated intervals.

Your vehicle is equipped with an information display which displays a message at the proper oil change service interval; the interval is one year or 10000 miles (16000 kilometers) under normal driving conditions.

2017 Fiesta (CCT) Canada/United States of America, HE8J 19A321 AB enUSA, Edition date: 201607, Second Printing

If **ENGINE OIL CHANGE DUE NEXT SERVICE** or **OIL CHANGE REQUIRED** appears in the information display, it is time for an oil change; the oil change must be done within two weeks or 500 miles (800 kilometers) of the **ENGINE OIL CHANGE DUE NEXT SERVICE** or **OIL CHANGE REQUIRED** message appearing. The oil minder system must be reset after each oil change. See **Oil Change Indicator Reset** (page 187).

If your information display resets prematurely or becomes inoperative, you should perform the oil change interval at six months or 5000 miles (8000 kilometers) from your last oil change. Never exceed one year or 10000 miles (16000 kilometers) between oil change intervals.

Your vehicle is very sophisticated and built with multiple, complex, performance systems. Every manufacturer develops these systems using different specifications and performance features. That is why it is important to rely upon your dealership to properly diagnose and repair your vehicle.

Ford Motor Company has recommended maintenance intervals for various parts and component systems based upon engineering testing. Ford Motor Company relies upon this testing to determine the most appropriate mileage for replacement of oils and fluids to protect your vehicle at the lowest overall cost to you and recommends against maintenance schedules that deviate from the scheduled maintenance information.

We strongly recommend the use of only genuine Ford, Motorcraft or Ford-authorized re-manufactured replacement parts engineered for your vehicle.

Additives and Chemicals

This owner's manual and the Ford Workshop Manual list the recommended additives and chemicals for your vehicle. We do not recommend using chemicals or additives not approved by us as part of your vehicle's normal maintenance. Please consult your warranty information.

Oils, Fluids and Flushing

In many cases, fluid discoloration is a normal operating characteristic and, by itself, does not necessarily indicate a concern or that the fluid needs to be changed. However, a qualified expert, such as the factory-trained technicians at your dealership, should inspect discolored fluids that also show signs of overheating or foreign material contamination immediately.

Make sure to change your vehicle's oils and fluids at the specified intervals or in conjunction with a repair. Flushing is a viable way to change fluid for many vehicle sub-systems during scheduled maintenance. It is critical that systems are flushed only with new fluid that is the same as that required to fill and operate the system or using a Ford-approved flushing chemical.

Owner Checks and Services

Make sure you perform the following basic maintenance checks and inspections every month or at six-month intervals.

2017 Fiesta (CCT) Canada/United States of America, HE8J 19A321 AB enUSA, Edition date: 201607, Second Printing

Check every month
Engine oil level.
Function of all interior and exterior lights.
Tires (including spare) for wear and proper pressure.
Windshield washer fluid level.

Check every six months
Battery connections. Clean if necessary.
Body and door drain holes for obstructions. Clean if necessary.
Cooling system fluid level and coolant strength.
Door weatherstrips for wear. Lubricate if necessary.
Hinges, latches and outside locks for proper operation. Lubricate if necessary.
Parking brake for proper operation.
Safety belts and seat latches for wear and function.
Safety warning lamps (brake, ABS, airbag and safety belt) for operation.
Washer spray and wiper operation. Clean or replace blades as necessary.

Multi-Point Inspection

In order to keep your vehicle running right, it is important to have the systems on your vehicle checked regularly. This can help identify potential issues and prevent major problems. We recommend having the following multi-point inspection performed at every scheduled maintenance interval to help make sure your vehicle keeps running great.

2017 Fiesta (CCT) Canada/United States of America, HE8J 19A321 AB enUSA, Edition date: 201607, Second Printing

Multi-Point inspection	
Accessory drive belt(s)	Hazard warning system operation
Battery performance	Horn operation
Clutch operation (manual transmission only)	Radiator, cooler, heater and air conditioning hoses
Engine air filter	Suspension components for leaks or damage
Exhaust system	Steering and linkage
Exterior lamps operation	Tires (including spare) for wear and proper pressure**
Fluid levels*; fill if necessary	Windshield for cracks, chips or pits
For oil and fluid leaks	Washer spray and wiper operation
Half-shaft dust boots	

* Brake, coolant recovery reservoir, automatic transmission and window washer

**If your vehicle is equipped with a temporary mobility kit, check the tire sealant expiration Use By date on the canister. Replace as needed.

Be sure to ask your dealership service advisor or technician about the multi-point vehicle inspection. It is a comprehensive way to perform a thorough inspection of your vehicle. Your checklist gives you immediate feedback on the overall condition of your vehicle.

NORMAL SCHEDULED MAINTENANCE

Your vehicle is equipped with an oil minder system that indicates when the engine oil should be changed under normal operating conditions.

This means you do not have to remember to change the oil on a mileage-based schedule; the vehicle lets you know when an oil change is due by displaying **ENGINE OIL CHANGE DUE** or **OIL CHANGE REQUIRED** in the information display.

2017 Fiesta (CCT) Canada/United States of America, HE8J 19A321 AB enUSA, Edition date: 201607, Second Printing

Every 10000 miles (16000 kilometers) or 12 months*
Change engine oil and filter.**
Rotate the tires.
Perform a multi-point inspection (recommended).
Inspect the automatic transmission fluid level. Consult your dealer for requirements.
Inspect the brake pads, shoes, rotors, drums, brake linings, hoses and parking brake.
Inspect the engine cooling system strength and hoses.
Inspect the exhaust system and heat shields.
Inspect the half-shaft boots.
Inspect the steering linkage, ball joints, suspension, tire-rod ends, driveshaft and U-joints. Lubricate any areas with grease fittings.
Inspect the tires, tire wear and measure the tread depth.
Inspect the wheels and related components for abnormal noise, wear, looseness or drag.

* Do not exceed one year or 10000 miles (16000 kilometers) between service intervals.

** Reset the oil minder system after each engine oil and filter change. See **Oil Change Indicator Reset** (page 187).

Other maintenance items[1]	
Every 20000 miles (32000 km)	Replace cabin air filter.
Every 30000 miles (48000 km)	Replace engine air filter.
At 100000 miles (160000 km)	Change engine coolant.[2]
Every 100000 miles (160000 km)	Replace spark plugs.
	Inspect accessory drive belt(s).[3]
Every 150000 miles (240000 km)	Change transmission fluid.
	Replace accessory drive belt(s).[4]

2017 Fiesta (CCT) Canada/United States of America, HE8J 19A321 AB enUSA, Edition date: 201607, Second Printing

Other maintenance items[1]	
	Replace timing belt (1.0L, 1.6L engine).
	Replace oil pump drive belt (1.0L engine).

[1] Additional maintenance items can be performed within 3000 miles (4800 kilometers) of the last engine oil and filter change. Do not exceed the designated distance for the interval.

[2] Initial replacement at six years or 100000 miles (160000 kilometers), then every three years or 50000 miles (80000 kilometers).

[3] After initial inspection, inspect every other oil change until replaced.

[4] If not replaced within the last 100000 miles (160000 kilometers).

2017 Fiesta (CCT) Canada/United States of America, HE8J 19A321 AB enUSA, Edition date: 201607, Second Printing

SPECIAL OPERATING CONDITIONS SCHEDULED MAINTENANCE

If you operate your vehicle **primarily** in any of the following conditions, you need to perform additional maintenance as indicated. If you operate your vehicle occasionally under any of these conditions, it is not necessary to perform the additional maintenance. For specific recommendations, see your dealership service advisor or technician.

Towing a trailer or using a car-top carrier	
As required	Change engine oil and filter as indicated by the information display and perform services listed in the Normal Scheduled Maintenance chart.
Every 30000 miles (48000 km)	Change automatic transmission fluid.
Every 60000 miles (96000 km)	Change manual transmission fluid.
	Replace spark plugs.

Extensive idling or low-speed driving for long distances, as in heavy commercial use (such as delivery, taxi, patrol car or livery)	
As required	Change engine oil and filter as indicated by the information display and perform services listed in the Normal Scheduled Maintenance chart.
Inspect frequently, service as required	Replace cabin air filter.
	Replace engine air filter.
Every 30000 miles (48000 km)	Change automatic transmission fluid.
Every 60000 miles (96000 km)	Replace spark plugs.

Operating in dusty or sandy conditions (such as unpaved or dusty roads)	
Inspect frequently, service as required	Replace cabin air filter.
	Replace engine air filter.
Every 5000 miles (8000 km)	Inspect the wheels and related components for abnormal noise, wear, looseness or drag.

2017 Fiesta (CCT) Canada/United States of America, HE8J 19A321 AB enUSA, Edition date: 201607, Second Printing

Operating in dusty or sandy conditions (such as unpaved or dusty roads)	
	Rotate tires, inspect tires for wear and measure tread depth.
Every 5000 miles (8000 km) or six months	Change engine oil and filter.*
	Perform multi-point inspection.
Every 30000 miles (48000 km)	Change automatic transmission fluid.
Every 50000 miles (80000 km)	Change manual transmission fluid.

*Reset your oil life monitor system after each engine oil and filter change. See **Oil Change Indicator Reset** (page 187).

Exclusive use of E85 (flex fuel vehicles only)	
Every oil change	If ran exclusively on E85, fill the fuel tank full with regular unleaded fuel.

Exceptions

There are several exceptions to the Normal Schedule:

California Fuel Filter Replacement

If you register your vehicle in California, the California Air Resources Board has determined that the failure to perform this maintenance item does not nullify the emission warranty or limit recall liability before the completion of your vehicle's useful life. Ford Motor Company, however, urges you to have all recommended maintenance services performed at the specified intervals and to record all vehicle service.

Hot Climate Oil Change Intervals

Vehicles operating in the Middle East, North Africa, Sub-Saharan Africa or locations with similar climates using an American Petroleum Institute (API) Certified for Gasoline Engines (Certification mark) oil of SM or SN quality, the normal oil change interval is 3000 miles (5000 kilometers).

If the available API SM or SN oils are not available, then the oil change interval is 1800 miles (3000 kilometers).

Engine Air Filter and Cabin Air Filter Replacement

The life of the engine air filter and cabin air filter is dependent on exposure to dusty and dirty conditions. Vehicles operated in these conditions require frequent inspection and replacement of the engine air filter and cabin air filter.

2017 Fiesta (CCT) Canada/United States of America, HE8J 19A321 AB enUSA, Edition date: 201607, Second Printing

SCHEDULED MAINTENANCE RECORD

Repair Order #:

Distance:

Engine hours (optional):

Multi-point inspection (recommended): ☐

Dealer stamp

Signature:

Repair Order #:

Distance:

Engine hours (optional):

Multi-point inspection (recommended): ☐

Dealer stamp

Signature:

2017 Fiesta (CCT) Canada/United States of America, HE8J 19A321 AB enUSA, Edition date: 201607, Second Printing

Repair Order #:

Distance:

Engine hours (optional):

Multi-point inspection (recommended): ☐

Dealer stamp

Signature:

Repair Order #:

Distance:

Engine hours (optional):

Multi-point inspection (recommended): ☐

Dealer stamp

Signature:

2017 Fiesta (CCT) Canada/United States of America, HE8J 19A321 AB enUSA, Edition date: 201607, Second Printing

Repair Order #:

Distance:

Engine hours (optional):

Multi-point inspection (recommended): ☐

Dealer stamp

Signature:

Repair Order #:

Distance:

Engine hours (optional):

Multi-point inspection (recommended): ☐

Dealer stamp

Signature:

2017 Fiesta (CCT) Canada/United States of America, HE8J 19A321 AB enUSA, Edition date: 201607, Second Printing

Repair Order #:

Distance:

Engine hours (optional):

Multi-point inspection (recommended): ☐

Dealer stamp

Signature:

Repair Order #:

Distance:

Engine hours (optional):

Multi-point inspection (recommended): ☐

Dealer stamp

Signature:

2017 Fiesta (CCT) Canada/United States of America, HE8J 19A321 AB enUSA, Edition date: 201607, Second Printing

Repair Order #:

Distance:

Engine hours (optional):

Multi-point inspection (recommended): ☐

Dealer stamp

Signature:

Repair Order #:

Distance:

Engine hours (optional):

Multi-point inspection (recommended): ☐

Dealer stamp

Signature:

2017 Fiesta (CCT) Canada/United States of America, HE8J 19A321 AB enUSA, Edition date: 201607, Second Printing

Repair Order #:

Distance:

Engine hours (optional):

Multi-point inspection (recommended): ☐

Dealer stamp

Signature:

Repair Order #:

Distance:

Engine hours (optional):

Multi-point inspection (recommended): ☐

Dealer stamp

Signature:

2017 Fiesta (CCT) Canada/United States of America, HE8J 19A321 AB enUSA, Edition date: 201607, Second Printing

Repair Order #:

Distance:

Engine hours (optional):

Multi-point inspection (recommended): ☐

Dealer stamp

Signature:

Repair Order #:

Distance:

Engine hours (optional):

Multi-point inspection (recommended): ☐

Dealer stamp

Signature:

2017 Fiesta (CCT) Canada/United States of America, HE8J 19A321 AB enUSA, Edition date: 201607, Second Printing

Repair Order #:

Distance:

Engine hours (optional):

Multi-point inspection (recommended): ☐

Dealer stamp

Signature:

Repair Order #:

Distance:

Engine hours (optional):

Multi-point inspection (recommended): ☐

Dealer stamp

Signature:

2017 Fiesta (CCT) Canada/United States of America, HE8J 19A321 AB enUSA, Edition date: 201607, Second Printing

Repair Order #:

Distance:

Engine hours (optional):

Multi-point inspection (recommended): ☐

Dealer stamp

Signature:

Repair Order #:

Distance:

Engine hours (optional):

Multi-point inspection (recommended): ☐

Dealer stamp

Signature:

2017 Fiesta (CCT) Canada/United States of America, HE8J 19A321 AB enUSA, Edition date: 201607, Second Printing

Repair Order #:

Distance:

Engine hours (optional):

Multi-point inspection (recommended): ☐

Dealer stamp

Signature:

Repair Order #:

Distance:

Engine hours (optional):

Multi-point inspection (recommended): ☐

Dealer stamp

Signature:

2017 Fiesta (CCT) Canada/United States of America, HE8J 19A321 AB enUSA, Edition date: 201607, Second Printing

END USER LICENSE AGREEMENT

VEHICLE SOFTWARE END USER LICENSE AGREEMENT (EULA)

- You (“You” or “Your” as applicable) have acquired a vehicle having several devices, including SYNC ® and various control modules, ("DEVICES") that include software licensed or owned by Ford Motor Company and its affiliates ("FORD MOTOR COMPANY"). Those software products of FORD MOTOR COMPANY origin, as well as associated media, printed materials, and "online" or electronic documentation ("SOFTWARE") are protected by international intellectual property laws and treaties. The SOFTWARE is licensed, not sold. All rights reserved.
- The SOFTWARE may interface with and/or communicate with, or may be later upgraded to interface with and/or communicate with additional software and/or systems provided by FORD MOTOR COMPANY.

IF YOU DO NOT AGREE TO THIS END USER LICENSE AGREEMENT ("EULA") DO NOT USE THE DEVICES OR COPY THE SOFTWARE. ANY USE OF THE SOFTWARE, INCLUDING BUT NOT LIMITED TO USE ON THE DEVICES, WILL CONSTITUTE YOUR AGREEMENT TO THIS EULA (OR RATIFICATION OF ANY PREVIOUS CONSENT).

GRANT OF SOFTWARE LICENSE: This EULA grants you the following license:

- You may use the SOFTWARE as installed on the DEVICES and as otherwise interfacing with systems and/or services provide by or through FORD MOTOR COMPANY or its third party software and service providers.

Description of Other Rights and Limitations

- **Speech Recognition:** If the SOFTWARE includes speech recognition component(s), you should understand that speech recognition is an inherently statistical process and that recognition errors are inherent in the process. Neither FORD MOTOR COMPANY nor its suppliers shall be liable for any damages arising out of errors in the speech recognition process. It is your responsibility to monitor any speech recognition functions included in the system.
- **Limitations on Reverse Engineering, Decompilation and Disassembly:** You may not reverse engineer, decompile, translate, disassemble or attempt to discover any source code or underlying ideas or algorithms of the SOFTWARE nor permit others to reverse engineer, decompile or disassemble the SOFTWARE, except and only to the extent that such activity is expressly permitted by applicable law notwithstanding this limitation or to the extent as may be permitted by the licensing terms governing use of any open source components included with the SOFTWARE.
- **Limitations on Distributing, Copying, Modifying and Creating Derivative Works:** You may not distribute, copy, make modifications to or create derivative works based on the SOFTWARE, except and only to the extent that such activity is expressly permitted by applicable law notwithstanding this limitation or to the extent as may be permitted by the licensing terms governing use of any open source components included with the SOFTWARE.

2017 Fiesta (CCT) Canada/United States of America, HE8J 19A321 AB enUSA, Edition date: 201607, Second Printing

- **Single EULA:** The end user documentation for the DEVICES and related systems and services may contain multiple EULAs, such as multiple translations and/or multiple media versions (e.g., in the user documentation and in the software). Even if you receive multiple EULAs, you are licensed to use only one (1) copy of the SOFTWARE.
- **SOFTWARE Transfer:** You may permanently transfer your rights under this EULA only as part of a sale or transfer of the DEVICES, provided you retain no copies, you transfer all of the SOFTWARE (including all component parts, the media and printed materials, any upgrades, and, if applicable, the Certificate(s) of Authenticity), and the recipient agrees to the terms of this EULA. If the SOFTWARE is an upgrade, any transfer must include all prior versions of the SOFTWARE.
- **Termination:** Without prejudice to any other rights, FORD MOTOR COMPANY may terminate this EULA if you fail to comply with the terms and conditions of this EULA.
- **Internet-Based Services Components:** The SOFTWARE may contain components that enable and facilitate the use of certain Internet-based services. You acknowledge and agree that FORD MOTOR COMPANY, third party software and service suppliers, its affiliates and/or its designated agent may automatically check the version of the SOFTWARE and/or its components that you are utilizing and may provide upgrades or supplements to the SOFTWARE that may be automatically downloaded to your DEVICES.
- **Additional Software/Services:** The SOFTWARE may permit FORD MOTOR COMPANY, third party software and service suppliers, its affiliates and/or its designated agent to provide or make available to you SOFTWARE updates, supplements, add-on components, or Internet-based services components of the SOFTWARE after the date you obtain your initial copy of the SOFTWARE ("Supplemental Components".) SOFTWARE updates may cause you to incur additional charges from your wireless service provider. If FORD MOTOR COMPANY or third party software and services suppliers provide or make available to you Supplemental Components and no other EULA terms are provided along with the Supplemental Components, then the terms of this EULA shall apply. FORD MOTOR COMPANY, its affiliates and/or its designated agent reserve the right to discontinue without liability any Internet-based services provided to you or made available to you through the use of the SOFTWARE.

2017 Fiesta (CCT) Canada/United States of America, HE8J 19A321 AB enUSA, Edition date: 201607, Second Printing

- **Links to Third Party Sites:** The SOFTWARE may provide you with the ability to link to third party sites. The third party sites are not under the control of FORD MOTOR COMPANY, its affiliates and/or its designated agent. Neither FORD MOTOR COMPANY nor its affiliates nor its designated agent are responsible for (I) the contents of any third party sites, any links contained in third party sites, or any changes or updates to third party sites, or (ii) webcasting or any other form of transmission received from any third party sites. If the SOFTWARE provides links to third party sites, those links are provided to you only as a convenience, and the inclusion of any link does not imply an endorsement of the third party site by FORD MOTOR COMPANY, its affiliates and/or its designated agent.
- **Obligation to Drive Responsibly:** You recognize your obligation to drive responsibly and keep attention on the road. You will read and abide with the DEVICES operating instructions particularly as they pertain to safety and you agree to assume any risk associated with the use of the DEVICES.

UPGRADES AND RECOVERY MEDIA: If the SOFTWARE is provided by FORD MOTOR COMPANY separate from the DEVICES on media such as a ROM chip, CD ROM disk(s) or via web download or other means, and is labeled "For Upgrade Purposes Only" or "For Recovery Purposes Only" you may install one (1) copy of such SOFTWARE onto the DEVICES as a replacement copy for the existing SOFTWARE, and use it in accordance with this EULA, including any additional EULA terms accompanying the upgrade SOFTWARE.

INTELLECTUAL PROPERTY RIGHTS: All title and intellectual property rights in and to the SOFTWARE (including but not limited to any images, photographs, animations, video, audio, music, text and "applets" incorporated into the SOFTWARE), the accompanying printed materials, and any copies of the SOFTWARE, are owned by FORD MOTOR COMPANY, or its affiliates or suppliers. The SOFTWARE is licensed, not sold. You may not copy the printed materials accompanying the SOFTWARE. All title and intellectual property rights in and to the content which may be accessed through use of the SOFTWARE is the property of the respective content owner and may be protected by applicable copyright or other intellectual property laws and treaties. This EULA grants you no rights to use such content outside its intended use. All rights not specifically granted under this EULA are reserved by FORD MOTOR COMPANY, its affiliates, and third party software and service providers and suppliers. Use of any on-line services which may be accessed through the SOFTWARE may be governed by the respective terms of use relating to such services. If this SOFTWARE contains documentation that is provided only in electronic form, you may print one copy of such electronic documentation.

EXPORT RESTRICTIONS: You acknowledge that the SOFTWARE is subject to U.S. and European Union export jurisdiction. You agree to comply with all applicable international and national laws that apply to the SOFTWARE, including the U.S. Export Administration Regulations, as well as end-user, end-use and destination restrictions issued by U.S. and other governments.

2017 Fiesta (CCT) Canada/United States of America, HE8J 19A321 AB enUSA, Edition date: 201607, Second Printing

TRADEMARKS: This EULA does not grant you any rights in connection with any trademarks or service marks of FORD MOTOR COMPANY, its affiliates, and third party software and service providers.

PRODUCT SUPPORT: Please refer to FORD MOTOR COMPANY instructions provided in the documentation for the DEVICES product support, such as the vehicle owner guide.

Should you have any questions concerning this EULA, or if you desire to contact FORD MOTOR COMPANY for any other reason, please refer to the address provided in the documentation for the DEVICES.

No Liability for Certain Damages: EXCEPT AS PROHIBITED BY LAW, FORD MOTOR COMPANY, ANY THIRD PARTY SOFTWARE OR SERVICES SUPPLIERS, AND THEIR AFFILIATES SHALL HAVE NO LIABILITY FOR ANY INDIRECT, SPECIAL, CONSEQUENTIAL OR INCIDENTAL DAMAGES ARISING FROM OR IN CONNECTION WITH THE USE OR PERFORMANCE OF THE SOFTWARE. THIS LIMITATION SHALL APPLY EVEN IF ANY REMEDY FAILS OF ITS ESSENTIAL PURPOSE. THERE ARE NO WARRANTIES OTHER THAN THOSE THAT MAY BE EXPRESSLY PROVIDED FOR YOUR NEW VEHICLE.

SYNC® Automotive Important Safety Information Read and follow instructions:

- Before using your SYNC® system, read and follow all instructions and safety information provided in this end user manual ("Owner Guide".) Not following precautions found in the Owner Guide can lead to an accident or other serious injuries.

General Operation

- **Voice Command Control**: Certain functions within the SYNC® system may be accomplished using voice commands. Using voice commands while driving helps you to operate the system without removing your hands from the wheel or eyes from the road.
- **Prolonged Views of Screen:** Do not access any function requiring a prolonged view of the screen while you are driving. Pull over in a safe and legal manner before attempting to access a function of the system requiring prolonged attention.
- **Volume Setting:** Do not raise the volume excessively. Keep the volume at a level where you can still hear outside traffic and emergency signals while driving. Driving while unable to hear these sounds could cause an accident.
- **Navigation Features:** Any navigation features included in the system are intended to provide turn by turn instructions to get you to a desired destination. Please make certain all persons using this system carefully read and follow instructions and safety information fully.
- **Distraction Hazard:** Any navigation features may require manual (non-verbal) setup. Attempting to perform such set-up or insert data while driving can distract your attention and could cause an accident or other serious injury. Stop the vehicle in a safe and legal manner before attempting these operations.
- **Let Your Judgment Prevail:** Any navigation features are provided only as an aid. Make your driving decisions based on your observations of local conditions and existing traffic regulations. Any such feature is not a

2017 Fiesta (CCT) Canada/United States of America, HE8J 19A321 AB enUSA, Edition date: 201607, Second Printing

substitute for your personal judgment. Any route suggestions made by this system should never replace any local traffic regulations or your personal judgment or knowledge of safe driving practices.

- **Route Safety:** Do not follow the route suggestions if doing so would result in an unsafe or illegal maneuver, if you would be placed in an unsafe situation, or if you would be directed into an area that you consider unsafe. The driver is ultimately responsible for the safe operation of the vehicle and therefore, must evaluate whether it is safe to follow the suggested directions.
- **Potential Map Inaccuracy:** Maps used by this system may be inaccurate because of changes in roads, traffic controls or driving conditions. Always use good judgment and common sense when following the suggested routes.
- **Emergency Services:** Do not rely on any navigation features included in the system to route you to emergency services. Ask local authorities or an emergency services operator for these locations. Not all emergency services such as police, fire stations, hospitals and clinics are likely to be contained in the map database for such navigation features.

Your Responsibilities and Assumptions of Risk

- You agree to each of the following:(a) Any use of the SOFTWARE while driving an automobile or other vehicle in violation of applicable law or otherwise driving in an unsafe manner presents a significant risk of distracted driving and should not be attempted under any circumstances;(b) Use of the SOFTWARE at excessive volume poses a significant risk of hearing damage and should not be attempted under any circumstances;(c) The SOFTWARE may not be compatible with new or different versions of an operating system, third party software, or third party services, and the SOFTWARE may potentially cause a critical failure of an operating system, third party software, or third party service.(d) Any third party service accessed by or third party software used with the SOFTWARE (I) may charge an additional fee for access, (ii) may not work correctly, on an uninterrupted basis, or error free, (iii) may change streaming formats or discontinue operation, (iv) may contain adult, profane or offensive content; and (v) may contain inaccurate, false or misleading traffic, weather, financial or safety information or other content; and (e) Use of the SOFTWARE may cause you to incur additional charges from your wireless service provider (WSP) and any data or minute calculators that may be included in the software program are for reference only, are not warranted in any way and should not be relied upon in anyway.
- When using the SOFTWARE, you agree to be responsible for and assume the entire risk to the items set forth in Section (a) – (e) above.

2017 Fiesta (CCT) Canada/United States of America, HE8J 19A321 AB enUSA, Edition date: 201607, Second Printing

Disclaimer of Warranty

YOU EXPRESSLY ACKNOWLEDGE AND AGREE THAT USE OF THE DEVICES AND SOFTWARE IS AT YOUR SOLE RISK AND THAT THE ENTIRE RISK AS TO SATISFACTORY QUALITY, PERFORMANCE, COMPATIBILITY, ACCURACY AND EFFORT IS WITH YOU. TO THE MAXIMUM EXTENT PERMITTED BY APPLICABLE LAW, THE SOFTWARE AND ANY THIRD PARTY SOFTWARE OR THIRD-PARTY SERVICES ARE PROVIDED "AS IS" AND “AS AVAILABLE”, WITH ALL FAULTS AND WITHOUT WARRANTY OF ANY KIND, AND FORD MOTOR COMPANY HEREBY DISCLAIMS ALL WARRANTIES AND CONDITIONS WITH RESPECT TO THE SOFTWARE, THIRD PARTY SOFTWARE, AND THIRD-PARTY SERVICES, EITHER EXPRESS, IMPLIED OR STATUTORY, INCLUDING, BUT NOT LIMITED TO, THE IMPLIED WARRANTIES AND/OR CONDITIONS OF MERCHANTABILITY, OF SATISFACTORY QUALITY, OF FITNESS FOR AN ARTICULAR PURPOSE, OF ACCURACY, OF QUIET ENJOYMENT, AND NON-INFRINGEMENT OF THIRD-PARTY RIGHTS. FORD MOTOR COMPANY DOES NOT WARRANT (a) AGAINST INTERFERENCE WITH YOUR ENJOYMENT OF THE SOFTWARE, THIRD PARTY SOFTWARE, OR THIRD-PARTY SERVICES, (b) THAT THE SOFTWARE, THIRD PARTY SOFTWARE, OR THIRD-PARTY SERVICES WILL MEET YOUR REQUIREMENTS, (c) THAT THE OPERATION OF THE SOFTWARE, THIRD PARTY SOFTWARE, OR THIRD-PARTY SERVICES WILL BE UNINTERRUPTED OR ERROR-FREE, (d) OR THAT DEFECTS IN THE SOFTWARE, THIRD PARTY SOFTWARE, OR THIRD-PARTY SERVICES WILL BE CORRECTED. NO ORAL OR WRITTEN INFORMATION OR ADVICE GIVEN BY FORD MOTOR COMPANY OR ITS AUTHORIZED REPRESENTATIVE SHALL CREATE A WARRANTY. SHOULD THE SOFTWARE, THIRD PARTY SOFTWARE, OR THIRD-PARTY SERVICES PROVE DEFECTIVE, YOU ASSUME THE ENTIRE COST OF ALL NECESSARY SERVICING, REPAIR OR CORRECTION. SOME JURISDICTIONS DO NOT ALLOW THE DISCLAIMER OF IMPLIED WARRANTIES OR LIMITATIONS ON APPLICABLE STATUTORY RIGHTS OF A CONSUMER, SO THE ABOVE DISCLAIMER MAY NOT FULLY APPLY TO YOU. THE SOLE WARRANTY PROVIDED BY FORD MOTOR COMPANY SHALL BE FOUND IN THE WARRANTY INFORMATION INCLUDING WITH YOUR OWNER GUIDE. TO THE EXTENT THAT THERE IS ANY CONFLICT BETWEEN THE TERMS OF THIS SECTION AND THE WARRANTY BOOKLET, THE WARRANTY BOOKLET SHALL CONTROL.

Applicable Law, Venue, Jurisdiction

- The laws of the State of Michigan govern this EULA and Your use of the SOFTWARE. Your use of the SOFTWARE may also be subject to other local, state, national, or international laws. Any litigation arising out of or related to this EULA shall be brought and maintained exclusively in a court of the State of Michigan located in Wayne County or in the United States District Court for the Eastern District of Michigan. You hereby consent to submit to the personal jurisdiction of a court in the State of Michigan located in Wayne County and the United States District Court for the Eastern District of Michigan for any dispute arising out of or relating to this EULA.

2017 Fiesta (CCT) Canada/United States of America, HE8J 19A321 AB enUSA, Edition date: 201607, Second Printing

Binding Arbitration and Class Action Waiver

(a) Application. This Section applies to any dispute EXCEPT IT DOES NOT INCLUDE A DISPUTE RELATING TO COPYRIGHT INFRINGEMENT, OR TO THE ENFORCEMENT OR VALIDITY OF YOUR, FORD MOTOR COMPANY, OR ANY OF FORD MOTOR COMPANY'S LICENSORS' INTELLECTUAL PROPERTY RIGHTS. Dispute means any dispute, action, or other controversy between You and FORD MOTOR COMPANY, other than the exceptions listed above, concerning the SOFTWARE (including its price) or this EULA, whether in contract, warranty, tort, statute, regulation, ordinance, or any other legal or equitable basis.

(b) Notice of Dispute. In the event of a Dispute, You or FORD MOTOR COMPANY must give the other a "Notice of Dispute", which is a written statement of the name, address, and contact information of the party giving it, the facts giving rise to the dispute, and the relief requested. You and FORD MOTOR COMPANY will attempt to resolve any dispute through informal negotiation within 60 days from the date the Notice of Dispute is sent. After 60 days, You or FORD MOTOR COMPANY may commence arbitration.

(c) Small claims court. You may also litigate any dispute in small claims court in your county of residence or FORD MOTOR COMPANY'S principal place of business, if the dispute meets all requirements to be heard in the small claims court. You may litigate in small claims court whether or not You negotiated informally first.

(d) Binding arbitration. If You and FORD MOTOR COMPANY, do not resolve any dispute by informal negotiation or in small claims court, any other effort to resolve the dispute will be conducted exclusively by binding arbitration. You are giving up the right to litigate (or participate in as a party or class member) all disputes in court before a judge or jury. Instead, all disputes will be resolved before a neutral arbitrator, whose decision will be final except for a limited right of appeal under the Federal Arbitration Act. Any court with jurisdiction over the parties may enforce the arbitrator's award.

(e) Class action waiver. Any proceedings to resolve or litigate any dispute in any forum will be conducted solely on an individual basis. Neither you nor FORD MOTOR COMPANY, will seek to have any dispute heard as a class action, as a private attorney general action, or in any other proceeding in which any party acts or proposes to act in a representative capacity. No arbitration or proceeding will be combined with another without the prior written consent of all parties to all affected arbitrations or proceedings.

(f) Arbitration procedure. Any arbitration will be conducted by the American Arbitration Association (the "AAA"), under its Commercial Arbitration Rules. If You are an individual and use the SOFTWARE for personal or vehicle use, or if the value of the dispute is $75,000 or less whether or not You are an individual or how You use the SOFTWARE, the AAA Supplementary Procedures for Consumer-Related Disputes will also apply. To commence arbitration, submit a Commercial Arbitration Rules Demand for Arbitration form to the AAA. You may request a telephonic or in-person hearing by following the AAA rules. In a dispute involving $10,000 or less, any hearing will be telephonic unless the arbitrator finds good cause to hold an in-person hearing instead. For more information, see adr.org or call 1-800-778-7879. You agree to commence arbitration only in your county of residence or FORD MOTOR COMPANY'S principal place of business. The arbitrator

2017 Fiesta (CCT) Canada/United States of America, HE8J 19A321 AB enUSA, Edition date: 201607, Second Printing

may award the same damages to You individually as a court could. The arbitrator may award declaratory or injunctive relief only to You individually, and only to the extent required to satisfy Your individual claim.

(g) Arbitration fees and incentives.

- I. Disputes involving $75,000 or less. FORD MOTOR COMPANY will promptly reimburse your filing fees and pay the AAA's and arbitrator's fees and expenses. If you reject FORD MOTOR COMPANY'S last written settlement offer made before the arbitrator was appointed ("last written offer"), your dispute goes all the way to an arbitrator's decision (called an "award"), and the arbitrator awards you more than the last written offer, FORD MOTOR COMPANY will give you three incentives: (1) pay the greater of the award or $1,000; (2) pay twice your reasonable attorney's fees, if any; and (3) reimburse any expenses (including expert witness fees and costs) that your attorney reasonably accrues for investigating, preparing, and pursuing your claim in arbitration. The arbitrator will determine the amounts.
- ii. Disputes involving more than $75,000. The AAA rules will govern payment of filing fees and the AAA's and arbitrator's fees and expenses.
- iii. Disputes involving any amount. In any arbitration you commence, FORD MOTOR COMPANY will seek its AAA or arbitrator's fees and expenses, or Your filing fees it reimbursed, only if the arbitrator finds the arbitration frivolous or brought for an improper purpose. In any arbitration FORD MOTOR COMPANY commences, it will pay all filing, AAA, and arbitrator's fees and expenses. It will not seek its attorney's fees or expenses from you in any arbitration. Fees and expenses are not counted in determining how much a dispute involves.

(h) Claims or disputes must be filed within one year. To the extent permitted by law, any claim or dispute under this EULA to which this Section applies must be filed within one year in small claims court (Section c) or in arbitration (Section d). The one-year period begins when the claim or dispute first could be filed. If such a claim or dispute is not filed within one year, it is permanently barred.

(I) Severability. If the class action waiver (Section e) is found to be illegal or unenforceable as to all or some parts of a dispute, then that portion of Section e will not apply to those parts. Instead, those parts will be severed and proceed in a court of law, with the remaining parts proceeding in arbitration. If any other provision of that portion Section e is found to be illegal or unenforceable, that provision will be severed with the remainder of Section e remaining in full force and effect.

Telenav Software End User License Agreement

Please read these terms and conditions carefully before you use the TeleNav Software. Your use of the TeleNav Software indicates that you accept these terms and conditions. If you do not accept these terms and conditions, do not break the seal of the package, launch, or otherwise use the TeleNav Software. TeleNav may revise this Agreement and the privacy policy at any time, with or without notice to you. You agree to visit http://www.telenav.com from time to time to review the then current version of this Agreement and of the privacy policy.

2017 Fiesta (CCT) Canada/United States of America, HE8J 19A321 AB enUSA, Edition date: 201607, Second Printing

1. Safe and Lawful Use

You acknowledge that devoting attention to the TeleNav Software may pose a risk of injury or death to you and others in situations that otherwise require your undivided attention, and you therefore agree to comply with the following when using the TeleNav Software:

(a) observe all traffic laws and otherwise drive safely;

(b) use your own personal judgment while driving. If you feel that a route suggested by the TeleNav Software instructs you to perform an unsafe or illegal maneuver, places you in an unsafe situation, or directs you into an area that you consider to be unsafe, do not follow such instructions;

(c) do not input destinations, or otherwise manipulate the TeleNav Software, unless your vehicle is stationary and parked;

(d) do not use the TeleNav Software for any illegal, unauthorized, unintended, unsafe, hazardous, or unlawful purposes, or in any manner inconsistent with this Agreement;

(e) arrange all GPS and wireless devices and cables necessary for use of the TeleNav Software in a secure manner in your vehicle so that they will not interfere with your driving and will not prevent the operation of any safety device (such as an airbag).

You agree to indemnify and hold TeleNav harmless against all claims resulting from any dangerous or otherwise inappropriate use of the TeleNav Software in any moving vehicle, including as a result of your failure to comply with the directions above.

2. Account Information

You agree: (a) when registering the TeleNav Software, to provide TeleNav with true, accurate, current, and complete information about yourself, and (b) to inform TeleNav promptly of any changes to such information, and to keep it true, accurate, current and complete.

3. Software License

- Subject to your compliance with the terms of this Agreement, TeleNav hereby grants to you a personal, non-exclusive, non-transferable license (except as expressly permitted below in connection with your permanent transfer of the TeleNav Software license), without the right to sublicense, to use the TeleNav Software (in object code form only) in order to access and use the TeleNav Software. This license shall terminate upon any termination or expiration of this Agreement. You agree that you will use the TeleNav Software only for your personal business or leisure purposes, and not to provide commercial navigation services to other parties.

3.1 License Limitations

- **(a)** reverse engineer, decompile, disassemble, translate, modify, alter or otherwise change the TeleNav Software or any part thereof; **(b)** attempt to derive the source code, audio library or structure of the TeleNav Software without the prior express written consent of TeleNav; **(c)** remove from the TeleNav Software, or alter, any of TeleNav's or its suppliers' trademarks, trade names, logos, patent or copyright notices, or other notices or markings; **(d)**

2017 Fiesta (CCT) Canada/United States of America, HE8J 19A321 AB enUSA, Edition date: 201607, Second Printing

distribute, sublicense or otherwise transfer the TeleNav Software to others, except as part of your permanent transfer of the TeleNav Software; or **(e)** use the TeleNav Software in any manner that

I. infringes the intellectual property or proprietary rights, rights of publicity or privacy or other rights of any party,

ii. violates any law, statute, ordinance or regulation, including but not limited to laws and regulations related to spamming, privacy, consumer and child protection, obscenity or defamation, or

iii. is harmful, threatening, abusive, harassing, tortuous, defamatory, vulgar, obscene, libelous, or otherwise objectionable; and (f) lease, rent out, or otherwise permit unauthorized access by third parties to the TeleNav Software without advanced written permission of TeleNav.

4. Disclaimers

- To the fullest extent permissible pursuant to applicable law, in no event will TeleNav, its licensors and suppliers, or agents or employees of any of the foregoing, be liable for any decision made or action taken by you or anyone else in reliance on the information provided by the TeleNav Software. TeleNav also does not warrant the accuracy of the map or other data used for the TeleNav Software. Such data may not always reflect reality due to, among other things, road closures, construction, weather, new roads and other changing conditions. You are responsible for the entire risk arising out of your use of the TeleNav Software. For example but without limitation, you agree not to rely on the TeleNav Software for critical navigation in areas where the well-being or survival of you or others is dependent on the accuracy of navigation, as the maps or functionality of the TeleNav Software are not intended to support such high risk applications, especially in more remote geographical areas.
- TELENAV EXPRESSLY DISCLAIMS AND EXCLUDES ALL WARRANTIES IN CONNECTION WITH THE TELENAV SOFTWARE, WHETHER STATUTORY, EXPRESS OR IMPLIED, INCLUDING ALL WARRANTIES WHICH MAY ARISE FROM COURSE OF DEALING, CUSTOM OR TRADE AND INCLUDING, BUT NOT LIMITED TO, THE IMPLIED WARRANTIES OF MERCHANTABILITY, FITNESS FOR A PARTICULAR PURPOSE AND NON-INFRINGEMENT OF THIRD PARTY RIGHTS WITH RESPECT TO THE TELENAV SOFTWARE.
- Certain jurisdictions do not permit the disclaimer of certain warranties, so this limitation may not apply to you.

5. Limitation of Liability

- TO THE EXTENT PERMITTED UNDER APPLICABLE LAW, UNDER NO CIRCUMSTANCES SHALL TELENAV OR ITS LICENSORS AND SUPPLIERS BE LIABLE TO YOU OR TO ANY THIRD PARTY FOR ANY INDIRECT, INCIDENTAL, CONSEQUENTIAL, SPECIAL OR EXEMPLARY DAMAGES (INCLUDING IN EACH CASE, BUT NOT LIMITED TO, DAMAGES FOR THE INABILITY TO USE THE EQUIPMENT OR ACCESS DATA, LOSS OF DATA, LOSS OF BUSINESS, LOSS OF PROFITS, BUSINESS INTERRUPTION OR THE LIKE) ARISING OUT OF THE USE OF OR INABILITY TO USE THE TELENAV SOFTWARE, EVEN IF TELENAV HAS BEEN ADVISED OF THE POSSIBILITY OF SUCH DAMAGES. NOTWITHSTANDING ANY DAMAGES THAT YOU MIGHT INCUR FOR ANY

2017 Fiesta (CCT) Canada/United States of America, HE8J 19A321 AB enUSA, Edition date: 201607, Second Printing

REASON WHATSOEVER (INCLUDING, WITHOUT LIMITATION, ALL DAMAGES REFERENCED HEREIN AND ALL DIRECT OR GENERAL DAMAGES IN CONTRACT, TORT (INCLUDING NEGLIGENCE) OR OTHERWISE), THE ENTIRE LIABILITY OF TELENAV AND OF ALL OF TELENAV'S SUPPLIERS SHALL BE LIMITED TO THE AMOUNT ACTUALLY PAID BY YOU FOR THE TELENAV SOFTWARE. SOME STATES AND/OR JURISDICTIONS DO NOT ALLOW THE EXCLUSION OR LIMITATION OF INCIDENTAL OR CONSEQUENTIAL DAMAGES, SO THE ABOVE LIMITATIONS OR EXCLUSIONS MAY NOT APPLY TO YOU.

6. Arbitration and Governing Law

- You agree that any dispute, claim or controversy arising out of or relating to this Agreement or the TeleNav Software shall be settled by independent arbitration involving a neutral arbitrator and administered by the American Arbitration Association in the County of Santa Clara, California. The arbitrator shall apply the Commercial Arbitration Rules of the American Arbitration Association, and the judgment upon the award rendered by the arbitrator may be entered by any court having jurisdiction. Note that there is no judge or jury in an arbitration proceeding and the decision of the arbitrator shall be binding upon both parties. You expressly agree to waive your right to a jury trial. This Agreement and performance hereunder will be governed by and construed in accordance with the laws of the State of California, without giving effect to its conflict of law provisions. To the extent judicial action is necessary in connection with the binding arbitration, both TeleNav and you agree to submit to the exclusive jurisdiction of the courts of the County of Santa Clara, California. The United Nations Convention on Contracts for the International Sale of Goods shall not apply.

7. Assignment

- You may not resell, assign, or transfer this Agreement or any of your rights or obligations, except in totality, in connection with your permanent transfer of the TeleNav Software, and expressly conditioned upon the new user of the TeleNav Software agreeing to be bound by the terms and conditions of this Agreement. Any such sale, assignment or transfer that is not expressly permitted under this paragraph will result in immediate termination of this Agreement, without liability to TeleNav, in which case you and all other parties shall immediately cease all use of the TeleNav Software. Notwithstanding the foregoing, TeleNav may assign this Agreement to any other party at any time without notice, provided the assignee remains bound by this Agreement.

8. Miscellaneous

8.1

This Agreement constitutes the entire agreement between TeleNav and you with respect to the subject matter hereof.

8.2

Except for the limited licenses expressly granted in this Agreement, TeleNav retains all right, title and interest in and to the TeleNav Software, including without limitation all related intellectual property rights. No licenses or other rights which are not expressly granted in this Agreement are intended to, or shall be, granted or

2017 Fiesta (CCT) Canada/United States of America, HE8J 19A321 AB enUSA, Edition date: 201607, Second Printing

conferred by implication, statute, inducement, estoppel or otherwise, and TeleNav and its suppliers and licensors hereby reserve all of their respective rights other than the licenses explicitly granted in this Agreement.

8.3

By using the TeleNav Software, you consent to receive from TeleNav all communications, including notices, agreements, legally required disclosures or other information in connection with the TeleNav Software (collectively, "Notices") electronically. TeleNav may provide such Notices by posting them on TeleNav's Website or by downloading such Notices to your wireless device. If you desire to withdraw your consent to receive Notices electronically, you must discontinue your use of the TeleNav Software.

8.4

TeleNav's or your failure to require performance of any provision shall not affect that party's right to require performance at any time thereafter, nor shall a waiver of any breach or default of this Agreement constitute a waiver of any subsequent breach or default or a waiver of the provision itself.

8.5

If any provision herein is held unenforceable, then such provision will be modified to reflect the intention of the parties, and the remaining provisions of this Agreement will remain in full force and effect.

8.6

The headings in this Agreement are for convenience of reference only, will not be deemed to be a part of this Agreement, and will not be referred to in connection with the construction or interpretation of this Agreement. As used in this Agreement, the words "include" and "including" and variations thereof, will not be deemed to be terms of limitation, but rather will be deemed to be followed by the words "without limitation".

9. Other Vendors Terms and Conditions

- The Telenav Software utilizes map and other data licensed to Telenav by third party vendors for the benefit of you and other end users. This Agreement includes end-user terms applicable to these companies (included at the end of this Agreement), and thus your use of the Telenav Software is also subject to such terms. You agree to comply with the following additional terms and conditions, which are applicable to Telenav’s third party vendor licensors::

9.1 End User Terms Required by HERE North America, LLC

The data (“Data”) is provided for your personal, internal use only and not for resale. It is protected by copyright, and is subject to the following terms and conditions which are agreed to by you, on the one hand, and Telenav (“Telenav”) and its licensors (including their licensors and suppliers) on the other hand.

© 2013 HERE. All rights reserved.

The Data for areas of Canada includes information taken with permission from Canadian authorities, including: © Her Majesty the Queen in Right of Canada, © Queen's Printer for Ontario, © Canada Post Corporation, GeoBase®, © Department of Natural Resources Canada.

2017 Fiesta (CCT) Canada/United States of America, HE8J 19A321 AB enUSA, Edition date: 201607, Second Printing

HERE holds a non-exclusive license from the United States Postal Service® to publish and sell ZIP+4® information.

©United States Postal Service® 2014. Prices are not established, controlled or approved by the United States Postal Service®. The following trademarks and registrations are owned by the USPS: United States Postal Service, USPS, and ZIP+4

The Data for Mexico includes certain data from Instituto Nacional de Estadística y Geografía.

9.2 End User Terms Required by NAV2 (Shanghai) Co., Ltd

The data ("Data") is provided for your personal, internal use only and not for resale. It is protected by copyright, and is subject to the following terms and conditions which are agreed to by you, on the one hand, and NAV2 (Shanghai) Co., Ltd ("NAV2") and its licensors (including their licensors and suppliers) on the other hand. 20xx. All rights reserved

Terms and Conditions

Permitted Use. You agree to use this Data together with the Telenav Software solely for the internal business and personal purposes for which you were licensed, and not for service bureau, time-sharing or other similar purposes. Accordingly, but subject to the restrictions set forth in the following paragraphs, you agree not to otherwise reproduce, copy, modify, decompile, disassemble, create any derivative works of, or reverse engineer any portion of this Data, and may not transfer or distribute it in any form, for any purpose, except to the extent permitted by mandatory laws.

Restrictions. Except where you have been specifically licensed to do so by Telenav, and without limiting the preceding paragraph, you may not use this Data (a) with any products, systems, or applications installed or otherwise connected to or in communication with vehicles, capable of vehicle navigation, positioning, dispatch, real time route guidance, fleet management or similar applications; or (b) with or in communication with any positioning devices or any mobile or wireless-connected electronic or computer devices, including without limitation cellular phones, palmtop and handheld computers, pagers, and personal digital assistants or PDAs.

Warning. The Data may contain inaccurate or incomplete information due to the passage of time, changing circumstances, sources used and the nature of collecting comprehensive geographic data, any of which may lead to incorrect results.

No Warranty. This Data is provided to you "as is," and you agree to use it at your own risk. Telenav and its licensors (and their licensors and suppliers) make no guarantees, representations or warranties of any kind, express or implied, arising by law or otherwise, including but not limited to, content, quality, accuracy, completeness, effectiveness, reliability, fitness for a particular purpose, usefulness, use or results to be obtained from this Data, or that the Data or server will be uninterrupted or error-free.

Disclaimer of Warranty: TELENAV AND ITS LICENSORS (INCLUDING THEIR LICENSORS AND SUPPLIERS) DISCLAIM ANY WARRANTIES, EXPRESS OR IMPLIED, OF QUALITY, PERFORMANCE, MERCHANTABILITY, FITNESS FOR A

2017 Fiesta (CCT) Canada/United States of America, HE8J 19A321 AB enUSA, Edition date: 201607, Second Printing

PARTICULAR PURPOSE OR NON-INFRINGEMENT. Some States, Territories and Countries do not allow certain warranty exclusions, so to that extent the above exclusion may not apply to you.

Disclaimer of Liability: TELENAV AND ITS LICENSORS (INCLUDING THEIR LICENSORS AND SUPPLIERS) SHALL NOT BE LIABLE TO YOU: IN RESPECT OF ANY CLAIM, DEMAND OR ACTION, IRRESPECTIVE OF THE NATURE OF THE CAUSE OF THE CLAIM, DEMAND OR ACTION ALLEGING ANY LOSS, INJURY OR DAMAGES, DIRECT OR INDIRECT, WHICH MAY RESULT FROM THE USE OR POSSESSION OF THE INFORMATION; OR FOR ANY LOSS OF PROFIT, REVENUE, CONTRACTS OR SAVINGS, OR ANY OTHER DIRECT, INDIRECT, INCIDENTAL, SPECIAL OR CONSEQUENTIAL DAMAGES ARISING OUT OF YOUR USE OF OR INABILITY TO USE THIS INFORMATION, ANY DEFECT IN THE INFORMATION, OR THE BREACH OF THESE TERMS OR CONDITIONS, WHETHER IN AN ACTION IN CONTRACT OR TORT OR BASED ON A WARRANTY, EVEN IF TELENAV OR ITS LICENSORS HAVE BEEN ADVISED OF THE POSSIBILITY OF SUCH DAMAGES. Some States, Territories and Countries do not allow certain liability exclusions or damages limitations, so to that extent the above may not apply to you.

Export Control. You shall not export from anywhere any part of the Data or any direct product thereof except in compliance with, and with all licenses and approvals required under, applicable export laws, rules and regulations, including but not limited to the laws, rules and regulations administered by the Office of Foreign Assets Control of the U.S. Department of Commerce and the Bureau of Industry and Security of the U.S. Department of Commerce. To the extent that any such export laws, rules or regulations prohibit HERE from complying with any of its obligations hereunder to deliver or distribute Data, such failure shall be excused and shall not constitute a breach of this Agreement.

Entire Agreement. These terms and conditions constitute the entire agreement between Telenav (and its licensors, including their licensors and suppliers) and you pertaining to the subject matter hereof, and supersedes in their entirety any and all written or oral agreements previously existing between us with respect to such subject matter.

Governing Law. The above terms and conditions shall be governed by the laws of the State of Illinois [insert “Netherlands” where European HERE Data is used], without giving effect to (i) its conflict of laws provisions, or (ii) the United Nations Convention for Contracts for the International Sale of Goods, which is explicitly excluded. You agree to submit to the jurisdiction of the State of Illinois [insert “The Netherlands” where European HERE Data is used] for any and all disputes, claims and actions arising from or in connection with the Data provided to you hereunder.

Government End Users. If the Data is being acquired by or on behalf of the United States government or any other entity seeking or applying rights similar to those customarily claimed by the United States government, this Data is a “commercial item” as that term is defined at 48 C.F.R. (“FAR”) 2.101, is licensed in accordance with these End-User Terms, and each copy of Data delivered or otherwise furnished shall be marked and embedded as appropriate with the following “Notice of Use,” and shall be treated in accordance with such Notice:

2017 Fiesta (CCT) Canada/United States of America, HE8J 19A321 AB enUSA, Edition date: 201607, Second Printing

NOTICE OF USE
CONTRACTOR (MANUFACTURER/ SUPPLIER) NAME: HERE CONTRACTOR (MANUFACTURER/ SUPPLIER) ADDRESS: c/o Nokia, 425 West Randolph Street, Chicago, Illinois 60606 This Data is a commercial item as defined in FAR 2.101 and is subject to these End-User Terms under which this Data was provided. © 1987 – 2014 HERE – All rights reserved.

If the Contracting Officer, federal government agency, or any federal official refuses to use the legend provided herein, the Contracting Officer, federal government agency, or any federal official must notify HERE prior to seeking additional or alternative rights in the Data.

I. US/Canada Territory

A. United States Data. The End-User Terms for any Application containing Data for the United States shall contain the following notices:

"HERE holds a non-exclusive license from the United States Postal Service® to publish and sell ZIP+4® information."

"©United States Postal Service® 20XX. Prices are not established, controlled or approved by the United States Postal Service®. The following trademarks and registrations are owned by the USPS: United States Postal Service, USPS, and ZIP+4."

B. Canada Data. The following provisions apply to the Data for Canada, which may include or reflect data from third party licensors ("Third Party Data"), including Her Majesty the Queen in Right of Canada ("Her Majesty"), Canada Post Corporation ("Canada Post") and the Department of Natural Resources of Canada ("NRCan"):

1. Disclaimer and Limitation: Client agrees that its use of the Third Party Data is subject to the following provisions:

a. Disclaimer: The Third Party Data is licensed on an "as is" basis. The licensors of such data, including Her Majesty, Canada Post and NRCan, make no guarantees, representations or warranties respecting such data, either express or implied, arising by law or otherwise, including but not limited to, effectiveness, completeness, accuracy or fitness for a particular purpose.

b. Limitation on Liability: The Third Party Data licensors, including Her Majesty, Canada Post and NRCan, shall not be liable: (i) in respect of any claim, demand or action, irrespective of the nature of the cause of the claim, demand or action alleging any loss, injury or damages, direct or indirect, which may result from the use or possession of such Data; or (ii) in any way for loss of revenues or contracts, or any other consequential loss of any kind resulting from any defect in the Data.

2017 Fiesta (CCT) Canada/United States of America, HE8J 19A321 AB enUSA, Edition date: 201607, Second Printing

2. Copyright Notice: In connection with each copy of all or any portion of the Data for the Territory of Canada, Client shall affix in a conspicuous manner the following copyright notice on at least one of: (i) the label for the storage media of the copy; (ii) the packaging for the copy; or (iii) other materials packaged with the copy, such as user manuals or end user license agreements: "This data includes information taken with permission from Canadian authorities, including © Her Majesty the Queen in Right of Canada, © Queen's Printer for Ontario, © Canada Post Corporation, GeoBase®, © The Department of Natural Resources Canada. All rights reserved."

3. End-User Terms: Except as otherwise agreed by the parties, in connection with the provision of any portion of the Data for the Territory of Canada to End-Users as may be authorized under the Agreement, Client shall provide such End-Users, in a reasonably conspicuous manner, with terms (set forth with other end user terms required to be provided under the Agreement, or as otherwise may be provided, by Client) which shall include the following provisions on behalf of the Third Party Data licensors, including Her Majesty, Canada Post and NRCan:

The Data may include or reflect data of licensors, including Her Majesty the Queen in the Right of Canada ("Her Majesty"), Canada Post Corporation ("Canada Post") and the Department of Natural Resources Canada ("NRCan"). Such data is licensed on an "as is" basis. The licensors, including Her Majesty, Canada Post and NRCan, make no guarantees, representations or warranties respecting such data, either express or implied, arising by law or otherwise, including but not limited to, effectiveness, completeness, accuracy or fitness for a particular purpose. The licensors, including Her Majesty, Canada Post and NRCan, shall not be liable in respect of any claim, demand or action, irrespective of the nature of the cause of the claim, demand or action alleging any loss, injury or damages, direct or indirect, which may result from the use or possession of the data or the Data. The licensors, including Her Majesty, Canada Post and NRCan, shall not be liable in any way for loss of revenues or contracts, or any other consequential loss of any kind resulting from any defect in the data or the Data.
End User shall indemnify and save harmless the licensors, including Her Majesty, Canada Post and NRCan, and their officers, employees and agents from and against any claim, demand or action, irrespective of the nature of the cause of the claim, demand or action, alleging loss, costs, expenses, damages or injuries (including injuries resulting in death) arising out of the use or possession of the data or the Data.

4. Additional Provisions: The terms contained in this Section are in addition to all of the rights and obligations of the parties under the Agreement. To the extent that any of the provisions of this Section are inconsistent with, or conflict with, any other provisions of the Agreement, the provisions of this Section shall prevail.

2017 Fiesta (CCT) Canada/United States of America, HE8J 19A321 AB enUSA, Edition date: 201607, Second Printing

II. Mexico. The following provision applies to the Data for Mexico, which includes certain data from the Instituto Nacional de Estadística y Geografía ("INEGI"):

A. Any and all copies of the Data and/or packaging containing Data for Mexico shall contain the following notice: "Fuente: INEGI (Instituto Nacional de Estadística y Geografía)"

III. Latin America Territory

A. Third Party Notices. Any and all copies of the Data and/or packaging relating thereto shall include the respective Third Party Notices set forth below and used as described below corresponding to the Territory (or portion thereof) included in such copy:

Territory	Notice
Ecuador	"INSTITUTO GEOGRAFICO MILITAR DEL ECUADOR AUTORIZACION Nº IGM-2011-01- PCO-01 DEL 25 DE ENERO DE 2011" "source: © IGN 2009 - BD TOPO ®"
Guadeloupe, French Guiana and Martinique Mexico	"Fuente: INEGI (Instituto Nacional de Estadística y Geografía)"

IV. Middle East Territory

A. Third Party Notices. Any and all copies of the Data and/or packaging relating thereto shall include the respective Third Party Notices set forth below and used as described below corresponding to the Territory (or portion thereof) included in such copy:

Country	Notice
Jordan	"© Royal Jordanian Geographic Centre". The foregoing notice requirement for Jordan Data is a material term of the Agreement. If Client or any of its permitted sublicensees (if any) fail to meet such requirement, HERE shall have the right to terminate Client's license with respect to the Jordan Data.

B. Jordan Data. Client and its permitted sublicensees (if any) are restricted from licensing and/or otherwise distributing HERE's database for the country of Jordan ("Jordan Data") for use in Enterprise Applications to (i) non-Jordanian entities for use of the Jordan Data solely in Jordan or (ii) Jordan-based customers. In addition, Client, its permitted sublicensees (if any) and End-Users are restricted from using the Jordan Data in Enterprise Applications if such party is (i) a non-Jordanian entity using the Jordan Data solely in Jordan or (ii) a Jordan-based customer. For purposes of the foregoing, "Enterprise Applications" shall mean Geomarketing applications, GIS applications, mobile business asset management applications, call center applications, telematics applications, public organization Internet applications or for providing geocoding services.

2017 Fiesta (CCT) Canada/United States of America, HE8J 19A321 AB enUSA, Edition date: 201607, Second Printing

V. Europe Territory

A. Use of Certain Traffic Codes in Europe

1. General Restrictions Applicable to Traffic Codes. Client acknowledges and agrees that in certain countries of the Europe Territory, Client will need to obtain rights directly from third party RDS-TMC code providers to receive and use the Traffic Codes in the Data and to deliver to End-Users Transactions in any way derived from or based on such Traffic Codes. For such countries, HERE shall deliver the Data incorporating Traffic Codes to Client only after receiving certification from Client of its having obtained such rights.

2. Display of Third Party Rights Legends for Belgium. Client shall, for each Transaction that uses Traffic Codes for Belgium, provide the following notice to the End-User: "Traffic Codes for Belgium are provided by the Ministerie van de Vlaamse Gemeenschap and the Ministèrie de l'Equipement et des Transports."

B. Paper Maps. With respect to any license granted to Client relating to making, selling or distributing paper maps (i.e., a map fixed on a paper or paper-like medium): (a) such license with respect to Data for the Territory of Great Britain is conditioned on Client's entering into and complying with a separate written agreement with the Ordnance Survey ("OS") to create and sell paper maps, Client's paying to the OS any and all applicable paper map royalties, and Client's complying with the OS copyright notice requirements; (b) such license for selling or otherwise distributing for charge with respect to Data for the Territory of Czech Republic is conditioned on Client's obtaining prior written consent from Kartografie a.s.; (c) such license for selling or distributing with respect to Data for the Territory of Switzerland is conditioned on Client's obtaining a permit from Bundesamt für Landestopografie of Switzerland; (d) Client is restricted from using Data for the Territory of France to create paper maps with a scale between 1:5,000 and 1:250,000; and (e) Client is restricted from using any Data to create, sell or distribute paper maps that are the same or substantially similar, in terms of data content and specific use of color, symbols and scale, to paper maps published by the European national mapping agencies, including without limitation, Landervermessungämter of Germany, Topografische Dienst of the Netherlands, Nationaal Geografisch Instituut of Belgium, Bundesamt für Landestopografie of Switzerland, Bundesamt für Eich-und Vermessung-swesen of Austria, and the National Land Survey of Sweden.

C. OS Enforcement. Without limiting Section IV(B) above, with respect to Data for the Territory of Great Britain, Client acknowledges and agrees that the Ordnance Survey ("OS") may bring a direct action against Client to enforce compliance with the OS copyright notice (see Section IV(D) below) and paper map requirements (see Section IV(B) above) contained in this Agreement.

D. Third Party Notices. Any and all copies of the Data and/or packaging relating thereto shall include the respective Third Party Notices set forth below and used as described below corresponding to the Territory (or portion thereof) included in such copy:

Country(ies) Notice

2017 Fiesta (CCT) Canada/United States of America, HE8J 19A321 AB enUSA, Edition date: 201607, Second Printing

Austria	“© Bundesamt für Eich- und Vermessungswesen”
Croatia Cyprus, Estonia, Latvia, Lithuania, Moldova, Poland, Slovenia and/or Ukraine	“© EuroGeographics”
France	“source: © IGN 2009 – BD TOPO ®”
Germany	“Die Grundlagendaten wurden mit Genehmigung der zuständigen Behörden entnommen”
Great Britain	“Contains Ordnance Survey data © Crown copyright and database right 2010 Contains Royal Mail data © Royal Mail copyright and database right 2010”
Greece	“Copyright Geomatics Ltd.”
Hungary	“Copyright © 2003; Top-Map Ltd.”
Italy	“La Banca Dati Italiana è stata prodotta usando quale riferimento anche cartografia numerica ed al tratto prodotta e fornita dalla Regione Toscana.”
Norway	“Copyright © 2000; Norwegian Mapping Authority”
Portugal	“Source: IgeoE – Portugal”
Spain	“Información geográfica propiedad del CNIG”
Sweden	“Based upon electronic data © National Land Survey Sweden.”
Switzerland	“Topografische Grundlage: © Bundesamt für Landestopographie.

E. Respective Country Distribution. Client acknowledges that HERE has not received approvals to distribute map data for the following countries in such respective countries: Albania, Belarus, Kyrgyzstan, Moldova and Uzbekistan. HERE may update such list from time to time. The license rights granted to Client under this TL with respect to the Data for such countries are contingent upon Client’s compliance with all applicable laws and regulations, including, without limitation, any required licenses or approvals to distribute the Application incorporating such Data in such respective countries.

VI. Australia Territory

A. Third Party Notices. Any and all copies of the Data and/or packaging relating thereto shall include the respective Third Party Notices set forth below and used as described below corresponding to the Territory (or portion thereof) included in such copy:

Copyright. Based on data provided under license from PSMA Australia Limited (www.psma.com.au).

2017 Fiesta (CCT) Canada/United States of America, HE8J 19A321 AB enUSA, Edition date: 201607, Second Printing

Product incorporates data which is © 20XX Telstra Corporation Limited, GM Holden Limited, Intelematics Australia Pty Ltd and Continental Pty Ltd.

B. Third Party Notices for Australia. In addition to the foregoing, the End-User Terms for any Application containing RDS-TMC Traffic Codes for Australia shall contain the following notice: "Product incorporates traffic location codes which is © 20XX Telstra Corporation Limited and its licensors."

AT&T Vehicle Network Carrier Telematics Disclosure

END USER FOR PURPOSES OF THIS SECTION MEANS YOU AND YOUR HEIRS, EXECUTORS, LEGAL PERSONAL REPRESENTATITVES AND PERMITED ASSIGNS. FOR PURPOSES OF THIS SECTION "UNDERLYING WIRELESS SERVICE CARRIER" INCLUDES ITS AFFILIATES AND CONTRACTORS AND THEIR RESPECTIVE OFFICERS, DIRECTORS, EMPLOYEES, SUCCESSORS AND ASSIGNS. END USER HAS NO CONTRACTUAL RELATIONSHIP WITH THE UNDERLYING WIRELESS SERVICE CARRIER AND END USER IS NOT A THIRD PARTY BENEFICIARY OF ANY AGREEMENT BETWEEN FORD AND UNDERLYING CARRIER. END USER UNDERSTANDS AND AGREES THAT THE UNDERLYING CARRIER HAS NO LEGAL, EQUITABLE, OR OTHER LIABILITY OF ANY KIND TO END USER. IN ANY EVENT, REGARDLESS OF THE FORM OF THE ACTION, WHETHER FOR BREACH OF CONTRACT, WARRANTY, NEGLIGENCE, STRICT LIABILITY IN TORT OR OTHERWISE, END USER'S EXCLUSIVE REMEDY FOR CLAIMS ARISING IN ANY WAY IN CONNECTION WITH THIS AGREEMENT, FOR ANY CAUSE WHATSOEVER, INCLUDING BUT NOT LIMITED TO ANY FAILURE OR DISRUPTION OF SERVICE PROVIDED HEREUNDER, IS LIMITED TO PAYMENT OF DAMAGES IN AN AMOUNT NOT TO EXCEED THE AMOUNT PAID BY END USER FOR THE SERVICES DURING THE TWO-MONTH PERIOD PRECEDING THE DATE THE CLAIM AROSE.

(ii) END USER AGREES TO INDEMNIFY AND HOLD HARMLESS THE UNDERLYING WIRELESS SERVICE CARRIER AND ITS OFFICERS, EMPLOYEES, AND AGENTS AGAINST ANY AND ALL CLAIMS, INCLUDING WITHOUT LIMITATION CLAIMS FOR LIBEL, SLANDER, OR ANY PROPERTY DAMAGE, PERSONAL INJURY OR DEATH, ARISING IN ANY WAY, DIRECTLY OR INDIRECTLY, IN CONNECTION WITH THIS AGREEMENT OR THE USE, FAILURE TO USE, OR INABILITY TO USE THE DEVICE EXCEPT WHERE THE CLAIMS RESULT FROM THE UNDERLYING CARRIER'S GROSS NEGLIGENCE OR WILLFUL MISCONDUCT. THIS INDEMNITY WILL SURVIVE THE TERMINATION OF THE AGREEMENT.

(iii) END USER HAS NO PROPERTY RIGHT IN ANY NUMBER ASSIGNED TO THE DEVICE.

(iv) END USER UNDERSTANDS THAT FORD AND THE UNDERLYING CARRIER CANNOT GUARANTY THE SECURITY OF WIRELESS TRANSMISSIONS, AND WILL NOT BE LIABLE FOR ANY LACK OF SECURITY RELATING TO THE USE OF THE SERVICES

THE SERVICE IS FOR [END USER'S] USE ONLY AND END USER MAY NOT RESELL THE SERVICE TO ANY OTHER PARTY END USER UNDERSTANDS THAT THE UNDERLYING CARRIER DOES NOT GUARANTEE ANY END USER UNINTERRUPTED SERVICE OR COVERAGE. THE UNDERLYING CARRIER DOES NOT WARRANT THAT END USERS CAN OR WILL BE LOCATED USING THE SERVICE. THE UNDERLYING CARRIER

2017 Fiesta (CCT) Canada/United States of America, HE8J 19A321 AB enUSA, Edition date: 201607, Second Printing

MAKES NO WARRANTY, EXPRESS OR IMPLIED, OF MERCHANTABILITY OR FITNESS FOR A PARTICULAR PURPOSE, SUITABILITY, OR PERFORMANCE REGARDING ANY SERVICES OR GOODS, AND IN NO EVENT SHALL AT&T BE LIABLE, WHETHER OR NOT DUE TO ITS OWN NEGLIGENCE, FOR ANY: (A) ACT OR OMISSION OF A THIRD PARTY; (B) MISTAKES, OMISSIONS, INTERRUPTIONS, ERRORS, FAILURES TO TRANSMIT, DELAYS, OR DEFECTS IN THE SERVICE PROVIDED BY OR THROUGH THE UNDERLYING CARRIER; (C) DAMAGE OR INJURY CAUSED BY SUSPENSION OR TERMINATION BY THE UNDERLYING CARRIER; OR (D) DAMAGE OR INJURY CAUSED BY A FAILURE OR DELAY IN CONNECTING A CALL TO ANY ENTITY, INCLUDING 911 OR ANY OTHER EMERGENCY SERVICE. TO THE FULL EXTENT ALLOWED BY LAW, THE END USER RELEASES, INDEMNIFIES AND HOLDS THE UNDERLYING CARRIER HARMLESS FROM AND AGAINST ANY AND ALL CLAIMS OF ANY PERSON OR ENTITY FOR DAMAGES OF ANY NATURE ARISING IN ANY WAY FROM OR RELATING TO, DIRECTLY OR INDIRECTLY, SERVICES PROVIDED BY THE UNDERLYING CARRIER OR ANY PERSON'S USE THEREOF, INCLUDING CLAIMS ARISING IN WHOLE OR IN PART FROM THE ALLEGED NEGLIGENCE OF THE UNDERLYING CARRIER.

VII. China Territory

Personal Use Only

You agree to use this Data together with [insert name of Client Application] for the solely personal, non-commercial purposes for which you were licensed, and not for service bureau, time-sharing or other similar purposes. Accordingly, but subject to the restrictions set forth in the following paragraphs, you may copy this Data only as necessary for your personal use to (i) view it, and (ii) save it, provided that you do not remove any copyright notices that appear and do not modify the Data in any way. You agree not to otherwise reproduce, copy, modify, decompile, disassemble or reverse engineer any portion of this Data, and may not transfer or distribute it in any form, for any purpose, except to the extent permitted by mandatory laws.

Restrictions

Except where you have been specifically licensed to do so by NAV2 , and without limiting the preceding paragraph, you may not (a) use this Data with any products, systems, or applications installed or otherwise connected to or in communication with vehicles, capable of vehicle navigation, positioning, dispatch, real time route guidance, fleet management or similar applications; or (b) with or in communication with any positioning devices or any mobile or wireless-connected electronic or computer devices, including without limitation cellular phones, palmtop and handheld computers, pagers, and personal digital assistants or PDAs. You agree to cease using this Data if you fail to comply with these terms and conditions.

Limited Warranty

NAV2 warrants that (a) the Data will perform substantially in accordance with the accompanying written materials for a period of ninety (90) days from the date of receipt, and (b) any support services provided by NAV2 shall be substantially as described in applicable written materials provided to you by NAV2, and NAV2's support engineers will make commercially reasonable efforts to solve any problem issues.

2017 Fiesta (CCT) Canada/United States of America, HE8J 19A321 AB enUSA, Edition date: 201607, Second Printing

rigCustomer Remedies

NAV2 and its suppliers' entire liability and your exclusive remedy shall be, at NAV2's sole discretion, either (a) return of the price paid, if any, or (b) repair or replacement of the Data that do not meet NAV2's Limited Warranty and that are returned to NAV2 with a copy of your receipt. This Limited Warranty is void if failure of the Data has resulted from accident, abuse, or misapplication. Any replacement Data will be warranted for the remainder of the original warranty period or thirty (30) days, whichever is longer. Neither these remedies nor any product support services offered by NAV2 are available without proof of purchase from an authorized international source.

No Other Warranty:

EXCEPT FOR THE LMITED WARRANTY SET FORTH ABOVE AND TO THE EXTENT PERMITTED BY APPLICABLE LAW, NAV2 AND ITS LICENSORS (INCLUDING THEIR LICENSORS AND SUPPLIERS) DISCLAIM ANY WARRANTIES, EXPRESS OR IMPLIED, OF QUALITY, PERFORMANCE, MERCHANTABILITY, FITNESS FOR A PARTICULAR PURPOSE, OWNERSHIP OR NON-INFRINGEMENT. Certain warranty exclusions may not be permitted under applicable law, so to that extent the above exclusion may not apply to you.

Limited Liability:

TO THE EXTENT PERMITTED BY APPLICABLE LAW, NAV2 AND ITS LICENSORS (INCLUDING THEIR LICENSORS AND SUPPLIERS) SHALL NOT BE LIABLE TO YOU: IN RESPECT OF ANY CLAIM, DEMAND OR ACTION, IRRESPECTIVE OF THE NATURE OF THE CAUSE OF THE CLAIM, DEMAND OR ACTION ALLEGING ANY LOSS, INJURY OR DAMAGES, DIRECT OR INDIRECT, WHICH MAY RESULT FROM THE USE OR POSSESSION OF THE INFORMATION; OR FOR ANY LOSS OF PROFIT, REVENUE, CONTRACTS OR SAVINGS, OR ANY OTHER DIRECT, INDIRECT, INCIDENTAL, SPECIAL OR CONSEQUENTIAL DAMAGES ARISING OUT OF YOUR USE OF OR INABILITY TO USE THIS INFORMATION, ANY DEFECT IN THE INFROMATION, OR THE BREACH OF THESE TERMS OR CONDITIONS, WHETHER IN AN ACTION IN CONTRACT OR TORT OR BASED ON A WARRANTY, EVEN IF NAV2 OR ITS LICENSORS HAVE BEEN ADVISED OF THE POSSIBILITY OF SUCH DAMAGES. UNDER NO CIRCUMSTANCES SHALL NAV2's OR ITS SUPPLIERS' LIABILITY HEREUNDER EXCEED THE PRICE PAID. Certain liability exclusions may not be permitted under applicable law, so to that extent the above exclusion may not apply to you.

Export Control

You agree not to export to anywhere any part of the Data provided to you or any direct product thereof except in compliance with, and with all licenses and approvals required under, applicable export laws, rules and regulations.

IP Protection

The Data are owned by NAV2 or its suppliers and are protected by applicable copyright and other intellectual property law and treaties. The Data are provided solely on the basis of a license to use, not sale.

Entire Agreement

These terms and conditions constitute the entire agreement between NAV2(and its licensors, including their licensors and suppliers) and you pertaining to the subject matter hereof, and supersedes in their entirety any and all written or oral agreements previously existing between us with respect to such subject matter.

2017 Fiesta (CCT) Canada/United States of America, HE8J 19A321 AB enUSA, Edition date: 201607, Second Printing

Governing Law.

The above terms and conditions shall be governed by the laws of the People's Republic of China, without giving effect to (i) its conflict of laws provisions, or (ii) the United Nations Convention for Contracts for the International Sale of Goods, which is explicitly excluded. Any dispute arising from or in connection with the Data provided to you hereunder shall be submitted to the Shanghai International Economic and Trade Arbitration Commission for arbitration.

Gracenote® Copyright

CD and music-related data from Gracenote, Inc., copyright©

2000-2007 Gracenote. Gracenote Software, copyright © 2000-2007 Gracenote. This product and service may practice one or more of the following U.S. Patents 5,987,525; 6,061,680; 6,154,773; 6,161,132; 6,230,192; 6,230,207; 6.240,459; 6,330,593 and other patents issued or pending. Some services supplied under license from Open Globe, Inc. for U.S. Patent 6,304,523.

Gracenote and CDDB are registered trademarks of Gracenote. The Gracenote logo and logotype, and the "Powered by Gracenote™" logo are trademarks of Gracenote.

Gracenote® End User License Agreement (EULA)

This device contains software from Gracenote, Inc. of 2000 Powell Street Emeryville, California 94608 ("Gracenote").

The software from Gracenote (the "Gracenote Software") enables this device to do disc and music file identification and obtain music-related information, including name, artist, track, and title information ("Gracenote Data") from online servers ("Gracenote Servers"), and to perform other functions. You may use Gracenote Data only by means of the intended End User functions of this device. This device may contain content belonging to Gracenote's providers. If so, all of the restrictions set forth herein with respect to Gracenote Data shall also apply to such content and such content providers shall be entitled to all of the benefits and protections set forth herein that are available to Gracenote. You agree that you will use the content from Gracenote ("Gracenote Content") , Gracenote Data, the Gracenote Software, and Gracenote Servers for your own personal, non-commercial use only. You agree not to assign, copy, transfer or transmit the Gracenote Content, Gracenote Software or any Gracenote Data (except in a Tag associated with a music file) to any third party. YOU AGREE NOT TO USE OR EXPLOIT GRACENOTE CONTENT, GRACENOTE DATA, THE GRACENOTE SOFTWARE, OR GRACENOTE SERVERS, EXCEPT AS EXPRESSLY PERMITTED HEREIN.

You agree that your non-exclusive licenses to use the Gracenote Content, Gracenote Data, the Gracenote Software, and Gracenote Servers will terminate if you violate these restrictions. If your licenses terminate, you agree to cease any and all use of the Gracenote Content, Gracenote Data, the Gracenote Software, and Gracenote Servers.

Gracenote, respectively, reserve all rights in Gracenote Data, the Gracenote Software, and the Gracenote Servers and Gracenote Content, including all ownership rights. Under no circumstances will either Gracenote become liable for any payment to you for any information that you provide,

2017 Fiesta (CCT) Canada/United States of America, HE8J 19A321 AB enUSA, Edition date: 201607, Second Printing

including any copyrighted material or music file information. You agree that Gracenote may enforce its respective rights, collectively or separately, under this agreement against you, directly in each company's own name.

Gracenote uses a unique identifier to track queries for statistical purposes. The purpose of a randomly assigned numeric identifier is to allow Gracenote to count queries without knowing anything about who you are. For more information, see the web page at www.gracenote.com for the Gracenote Privacy Policy.

THE GRACENOTE SOFTWARE, EACH ITEM OF GRACENOTE DATA AND THE GRACENOTE CONTENT ARE LICENSED TO YOU "AS IS". NEITHER GRACENOTE MAKES ANY REPRESENTATIONS OR WARRANTIES, EXPRESS OR IMPLIED, REGARDING THE ACCURACY OF ANY GRACENOTE DATA FROM THE GRACENOTE SERVERS OR GRACENOTE CONTENT. GRACENOTE COLLECTIVELY AND SEPARATELY RESERVE THE RIGHT TO DELETE DATA AND/OR CONTENT FROM THE COMPANIES' RESPECTIVE SERVERS OR, IN THE CASE OF GRACENOTE, CHANGE DATA CATEGORIES FOR ANY CAUSE THAT GRACENOTE DEEMS SUFFICIENT. NO WARRANTY IS MADE THAT EITHER GRACENOTE CONTENT OR THE GRACENOTE SOFTWARE OR GRACENOTE SERVERS ARE ERROR-FREE OR THAT THE FUNCTIONING OF THE GRACENOTE SOFTWARE OR GRACENOTE SERVERS WILL BE UNINTERRUPTED. GRACENOTE IS NOT OBLIGATED TO PROVIDE YOU WITH ANY ENHANCED OR ADDITIONAL DATA TYPES THAT GRACENOTE MAY CHOOSE TO PROVIDE IN THE FUTURE AND IS FREE TO DISCONTINUE ITS ONLINE SERVICES AT ANY TIME. GRACENOTE DISCLAIM ALL WARRANTIES EXPRESS OR IMPLIED, INCLUDING, BUT NOT LIMITED TO, IMPLIED WARRANTIES OF MERCHANTABILITY, FITNESS FOR A PARTICULAR PURPOSE, TITLE, AND NON-INFRINGEMENT. NEITHER GRACENOTE WARRANTS THE RESULTS THAT WILL BE OBTAINED BY YOUR USE OF THE GRACENOTE SOFTWARE OR ANY GRACENOTE SERVER. IN NO CASE WILL GRACENOTE BE LIABLE FOR ANY CONSEQUENTIAL OR INCIDENTAL DAMAGES OR FOR ANY LOST PROFITS OR LOST REVENUES FOR ANY REASON WHATSOEVER. © Gracenote 2007.

Radio Frequency Statement

FCC ID: ACJ-SYNCG3-L

IC: 216B-SYNCG3-L

This device complies with Part 15 of the FCC Rules and with RSS-210 of Industry Canada. Operation is subject to the following two conditions:

(1) This device may not cause harmful interference, and

(2) this device must accept any interference received, including interference that may cause undesired operation.

Note: *Changes or modifications not expressly approved by the party responsible for compliance could void the user's authority to operate the equipment. The term "IC" before the radio certification number only signifies that Industry Canada technical specifications were met.*

The antenna used for this transmitter must not be co-located or operating in conjunction with any other antenna or transmitter.

Taiwan Territory

Note: In accordance with the management approach of low-power radio wave radiation motors:

2017 Fiesta (CCT) Canada/United States of America, HE8J 19A321 AB enUSA, Edition date: 201607, Second Printing

Article 12: For approved and certified low-power radiation motor models, companies, firms or users must not alter the frequency, increase the power or change the characteristics and functions of the original design without authorization.

Article 14: The usage of low-power radio-frequency motors must not affect aviation safety and interfere with legal telecommunications. Should interference be detected, immediately stop using the device and only resume usage after ensuring that there is no longer any interference. For the legal telecommunication and wireless telecommunication of the telco, the low-power radio frequency motor must be able to tolerate legal limits of interference from telecommunication, industrial, scientific and radio wave equipment.

SUNA TRAFFIC CHANNEL – TERMS AND CONDITIONS

By activating, using and/or accessing the SUNA Traffic Channel, SUNA Predictive or other content or material provided by Intelematics (together, **SUNA Products and/or Services**), you must accept certain terms and conditions. The following is a brief summary of the terms and conditions that apply to you. To view the full terms and conditions relevant to your use of the SUNA Products and/or Services, please consult:

Website
www.sunatraffic.com.au/termsandconditions/

1. Acceptance

By using SUNA Products and/or Services, you will be deemed to have accepted and agreed to be bound by the terms and conditions fully detailed at:

Website
www.sunatraffic.com.au/termsandconditions/

2. Intellectual Property

SUNA Products and/or Services are for your personal use. You may not record, or retransmit the content, nor use the content in association with any other traffic information or route guidance service or device not approved by Intelematics. You obtain no right of ownership in any Intellectual Property Rights (including copyright) in the data that is used to provide SUNA Products and/or Services.

3. Appropriate Use

SUNA Products and/or Services are intended as an aid to personal motoring and travel planning, and do not provide comprehensive or accurate information on all occasions. On occasions, you may experience additional delay as a result of using SUNA Products and/or Services. You acknowledge that it is not intended, or suitable, for use in applications where time of arrival or driving directions may impact the safety of the public or yourself.

4. Use of SUNA Products and Services while driving

You, and other authorised drivers of the vehicle in which SUNA Products and/or Services are available or installed and active, remain at all times responsible for observing all relevant laws and codes of safe driving. In particular, you agree to only actively operate SUNA Products and/or Services when the Vehicle is at a complete stop and it is safe to do so.

5. Service Continuity and Reception of the SUNA Traffic Channel

2017 Fiesta (CCT) Canada/United States of America, HE8J 19A321 AB enUSA, Edition date: 201607, Second Printing

We will use reasonable endeavours to provide the SUNA Traffic Channel 24 hours a day, 365 days a year. The SUNA Traffic Channel may occasionally be unavailable for technical reasons or for planned maintenance. We will try to perform maintenance at times when congestion is light. We reserve the right to withdraw SUNA Products and/or Services at any time.

Also, we cannot assure the uninterrupted reception of the SUNA Traffic Channel RDS-TMC signal at any particular location.

6. Limitation of Liability

Neither Intelematics (nor its suppliers or the manufacturer of your device (the "**Suppliers**")) shall be liable to you or to any third party for any damages either direct, indirect, incidental, consequential or otherwise arising out of the use of or inability to use SUNA Products and/or Services even if Intelematics or a Supplier has been advised of the possibility of such damages. You also acknowledge that the neither Intelematics nor any Supplier guarantees nor make any warranties that relate to the availability, accuracy or completeness of SUNA Products and/or Services, and to the extent which it is lawful to do so, both Intelematics and each Supplier excludes any warranties which might otherwise be implied by any State or Federal legislation in relation to SUNA Products and/or Services.

7. Please Note

Great care has been taken in preparing this manual. Constant product development may mean that some information is not entirely up-to-date. The information in this document is subject to change without notice.

WARNING

Driving while distracted can result in loss of vehicle control, crash and injury. We strongly recommend that you use extreme caution when using any device that may take your focus off the road. Your primary responsibility is the safe operation of your vehicle. We recommend against the use of any hand-held device while driving and encourage the use of voice-operated systems when possible. Make sure you are aware of all applicable local laws that may affect the use of electronic devices while driving.

FordPass Connect Terms and Conditions

Your Ford vehicle is equipped with an embedded modem ("Device") which transmits data and allows access to our service of vehicle connectiviy ("Service"), certain of which is provided through FordPass, a smartphone-compatible application ("App").

Service is available for use with your Device produced/provided by us ("Ford"). Your use of the Device and access to and use of the Service is subject to these Terms and Conditions and all policies and guidelines referred to herein, hereafter collectively these "Terms and Conditions".

1. Acceptance of Terms and Conditions

Your use of the Device and the Service is conditional upon your acceptance of these Terms and Conditions. By signing on these Terms and Conditions, you agree to accept these Terms and Conditions. By accepting these Terms and Conditions you represent that you are at least 18 years old and that you agree to comply with these Terms and Conditions.

2017 Fiesta (CCT) Canada/United States of America, HE8J 19A321 AB enUSA, Edition date: 201607, Second Printing

2. Device and Service

Ford has the discretion to decide on the content and features of Service. Your use of Service is subject to, in addition to these Terms and Conditions, the terms and conditions for the use of the FordPass App (“APP T&C”). In case of any discrepancy between these Terms and Conditions and App terms and conditions, the App terms and conditions shall prevail. [If you do not agree to the App T&C, you must immediately stop using Service.]

3. Service Registration

A third-party service provider (“Telecom Service Provider”) provides telecom infrastructure for Service. As required by applicable laws, the Telecom Service Provider will request you to, and you must, as requested, register your real name with the Telecom Service Provider for the use of the SIM card pre-equipped in Device, and provide personal information as required by the Telecom Service Provider, including but not limited to:

- Chinese Identity Certificate Number, or such other indentification number as the telecom service provide may require;
- Scanned copy of your identification certificate;
- Photo of you holding your identification certificate; and
- Such other personal information as may be required.

You shall provide real and correct information. If you have another person to provide his/her information as aforesaid you shall ensure he/she is at least 18 years old and his/her information provided shall be real and correct. The Telecom Service Provider may cease to provide telecom infrastructure support and you may not be able to have access to the Service if you fail to provide information as aforesaid.

You are solely responsible for the use of Device and/or Service whether the aforesaid information is provided by yourself or another person.

4. Complimentary Service Period

You will receive up to [three (3) years] of complimentary Service free of charge from the invoice date of your vehicle equipped with the Device (“Commecement Date”) (“Complimentary Period”). For continued use of Service after the Complimentary Period, you will need to pay a subscription fee as to be notified by us. You may stop using Service if you do not agree to pay the subscription fee then.

5. Possible Extra Charges

The Service is based on service and support provided by certain third party suppliers, including without limitation the data transmission service provided by the Telecom Service Provider. You may be charged by such third party suppliers. In particular, if you use the Wifi hotspot afforded by Device to transmit data, the Telecom Service Provider may charge you on their rates. You are advised to consult the Telecom Service Provide on its package charging rates.

6. Information Collection and Privacy

Without prejudice to the APP T&C (where applicable to the use of Service), when you use the Service, certain information will be collected by us from the Device and APP as required by laws and regulations and in order to provide you with the Service.

You agree for us to collect the following information (“Collected Information”):

2017 Fiesta (CCT) Canada/United States of America, HE8J 19A321 AB enUSA, Edition date: 201607, Second Printing

- Certain information of status and operation of new energy vehicles, if applicable, (e.g. information of battery, gear lever postion, motor status, vehicle warning status, vehicle charging status, temperature of key parts, etc) as required by applicable laws;
- Your personal information (e.g. your name, ID card number, cell phone number, etc., “Personal Information”), diagnostic data (e.g. tire pressure, fuel level, oil life, hardware and software version, mileage, etc. of your vehicle), driving track record (e.g. location, direction and path, status of seat belt, accelerator/brake pedal position, etc.) and network connection data (e.g. network attachment, data traffic, IP address and etc.).

How We Use Collected Information: We use your personal information to provide you with great functionality and services, allow you to control certain vehicle features, fulfill requests you’ve made in FordPass, personalize your experience, troubleshoot problems, develop new and improved products, services, and marketing strategies and research, to protect safety, property, privacy, and security, or to comply with legal requirements. WE MAY SEND COMMUNICATIONS ABOUT DEVICE, SERVICES, OFFERS OF PACKAGE CHARGING RATES, PROMOTIONS, NEWS, AND MORE THAT ARE CUSTOMIZED BASED ON YOUR PERSONAL INFORMATION, INCLUDING YOUR LOCATION, SPEED, AND DRIVING CHARACTERISTICS. You may choose not to provide certain Personal Information (such as not entering a Vehicle Identification Number (VIN) to connect to your vehicle), but this may limit or prevent use of certain features.

How We Share Information: We may use and share non-personal information for any purpose. We do not provide your Personal Information to anyone for independent use, without providing you a choice, except authorized dealers and our affiliates. We also share your Personal Information with trusted service providers, under agreements that limit how they may use your personal information and require adequate safeguards. Our affiliates mean the group of companies related by common control or ownership. We may provide your Personal Information to external companies under contract with us to enable delivery of the services and where they are subject to confidentiality and security obligations. We may share your Personal Information without notice to you where we believe that doing so is reasonably necessary to: comply with a legal requirement or enforceable governmental request; protect and defend the rights or property of us and our affiliates; act under exigent circumstances to protect the personal safety of us or affiliate personnel, users of our vehicles, websites or apps, or the public; and detect, prevent, or otherwise address fraud, security, safety, or privacy issues.

Your Consent: By accepting these Terms and Conditions, you expressly agree to the collection, logging, storage, and sharing of the information as collected as aforesaid for the purposes set forth above. Further, you agree to obtain the consent to the collection, logging, storage, use and sharing of the information as collected as aforesaid from any of your Authorized Users of your vehicle and/or Device for the purposes set forth above. You understand and consent to the collection, use, processing, transfer, and disclosure of your Personal Information globally (including to the United States), to the extent in compliance with the preceding paragraphs of this section and applicable laws. To the

2017 Fiesta (CCT) Canada/United States of America, HE8J 19A321 AB enUSA, Edition date: 201607, Second Printing

fullest extent allowed by applicable law, such information may be transferred across country borders, and used, processed, and disclosed in global locations that may have different levels of privacy protection than in your own country. If you do not consent or do not wish to disclose this information, do not use Device and Service.

How to Contact Us, Access, or Control the Use of Your Information: For more information or to request correction or removal of personal information, contact us as set forth in the Contact Us section below.

Security and Retention of Your Information: We use systems, policies, procedures, and technology to provide reasonable security to protect and maintain the security and accuracy of your information. We will only retain your Personal Information for so long as reasonably necessary to fulfill legitimate business purposes.

Privacy Policy Effective Date and Revisions: This Privacy Policy may be updated in order to reflect any changes to Device, App and/or Services or privacy practices.

7. Modification of These Terms and Conditions

Ford may at their sole discretion, with or without notice, modify these Terms and Conditions at any time and such modifications will be effective immediately upon being posted on the App or at www.Ford.com.cn or otherwise notified to you. Your continued use of Devide or Service will indicate your acceptance of these modified Terms and Conditions. If you do not agree to the Terms and Conditions or any modification of the Terms and Conditions, you must immediately stop using Device and Service.

8. Authorized Users and Purchaser

You may allow others who are above 18 years old (including without limitation passengers and other drivers of your vehicle, each an “Authorized User”) to use your Device and/or Service provided through your Device or APP user account registered in connection with your vehicle and/or Device, provided that you are responsible for the use of Device and/or Service by your Authorized Users, and for informing your Authorized Users of these Terms and Conditions and causing each Authorized Users to agree to these Terms and Conditions.

If you resell the vehicle to another party (“Purchaser”), you are responsible for informing the Purchaser of these Terms and Conditions. Upon your resale of your vehicle to a Purchaser, you must immediately de-register the user name of the SIM card embedded in Device and [Master Reset the Service] and inform the Purchaser to register his/her personal information to reactivate the SIM card in the Device. If you fail to follow the preceding, you may be held liable under applicable laws and/or the Telecom Service Provider may cease to provide telecommincation service to support Service to you.

9. Disclaimer

Service may be interrupted due to a variety of reasons which are out of our control and is based on certain services provided by third party suppliers which is out of our control. We are not responsible for any interruptions of Service. We may modify, suspend, or discontinue Service or any feature at any time without notice. Device

2017 Fiesta (CCT) Canada/United States of America, HE8J 19A321 AB enUSA, Edition date: 201607, Second Printing

and Service accessible through it are provided for information purposes only on an "as is" and “as available” basis. We make no warranties or guarantees availability of Service without interruption or error.

10. Contact Us

If you have any questions, comments, or claims regarding Device or Service, you may contact your authorized dealer or contact us at:

Changan Ford: 400-8877766

2017 Fiesta (CCT) Canada/United States of America, HE8J 19A321 AB enUSA, Edition date: 201607, Second Printing

2017 Fiesta (CCT) Canada/United States of America, HE8J 19A321 AB enUSA, Edition date: 201607, Second Printing

A

A/C
See: Climate Control.....96
About This Manual.....7
ABS
See: Brakes.....132
ABS driving hints
See: Hints on Driving With Anti-Lock Brakes.....132
Accessories.....392
Exterior style.....392
Interior style.....392
Lifestyle.....392
Peace of mind.....392
Accessories
See: Replacement Parts Recommendation.....12
Adjusting the Headlamps.....195
Horizontal Aim Adjustment.....197
Vertical Aim Adjustment.....195
Adjusting the Steering Wheel.....68
Airbag Disposal.....46
Air Conditioning
See: Climate Control.....96
Air Filter
See: Changing the Engine Air Filter.....209
Alarm
See: Anti-Theft Alarm.....66
Ambient Lighting.....76
Anti-Theft Alarm.....66
Alarm System.....66
Arming the Alarm.....66
Disarming the Alarm.....66
Triggering the Alarm.....66
Appendices.....414
Apps.....364
.....364
SiriusXM Traffic and Travel Link.....366
Audible Warnings and Indicators.....85
Exterior Lamps On.....85
Gearshift Lever Not in Park (P).....85
Key in Ignition.....85
Key Outside Vehicle - Vehicles With Keyless System.....85
Parking Brake On.....85
Safety Belt Minder.....85
Audio Control.....68
Audio Input Jack.....274
Audio System.....257
General Information.....257
Audio Unit - Vehicles With: AM/FM/CD/SYNC.....262
Alternative Frequencies.....265
Automatic Volume Control.....265
Autostore Control.....265
Sound Button.....264
Station Preset Buttons.....264
Station Tuning Control.....264
Waveband Button.....264
Audio Unit - Vehicles With: AM/FM/CD.....258
Alternative Frequencies.....261
Automatic Volume Control.....261
Autostore Control.....261
Sound Button.....260
Station Preset Buttons.....261
Station Tuning Control.....260
Waveband Button.....260
Audio Unit - Vehicles With: Sony Audio System/Touchscreen Display.....266
Audio Unit - Vehicles With: Touchscreen Display.....268
Autolamps.....73
Windshield Wiper Activated Headlamps.....73
Automatic Climate Control.....97
Temperature Control.....98
Automatic Transmission.....127
Emergency Park Position Release Lever.....130
Hints on Driving with an Automatic Transmission.....129
Selector Lever Positions.....127
Sport Mode and Manual Shifting.....129
Automatic Transmission Fluid Check.....192
Auxiliary Power Points.....109
12 Volt DC Power Point.....109
Location.....109

B

Battery
See: Changing the 12V Battery.....193

2017 Fiesta (CCT) Canada/United States of America, HE8J 19A321 AB enUSA, Edition date: 201607, Second Printing

Bonnet Lock
See: Opening and Closing the Hood.....182
Booster Seats.....23
Types of Booster Seats.....24
Brake Fluid Check.....192
Brakes.....132
General Information.....132
Breaking-In.....158
Bulb Specification Chart.....208

C

Cabin Air Filter.....101
California Proposition 65.....11
Capacities and Specifications - 1.0L EcoBoost™.....250
Alternative Engine Oil for Extreme Cold Climates.....252
Capacities.....250
Specifications.....250
Capacities and Specifications - 1.6L Duratec-16V Ti-VCT (Sigma).....253
Alternative Engine Oil for Extreme Cold Climates.....256
Capacities.....253
Specifications.....254
Capacities and Specifications.....243
Cargo Nets.....148
Installing and Removing the Cargo Net.....148
Car Wash
See: Cleaning the Exterior.....212
Catalytic Converter.....119
Driving with a Catalytic Converter.....120
Center Console.....111
Changing a Bulb - 4-Door.....202
Center High Mounted Stop Lamp.....206
Front Fog Lamps.....204
Headlamp.....202
Interior Lamp.....207
License Plate Lamp.....206
Luggage Compartment Lamp, Footwell Lamp and Liftgate Lamp.....207
Reading Lamps.....207
Rear Lamps.....205
Side Direction Indicator.....204
Changing a Bulb - 5-Door.....197
Center High Mounted Stop Lamp.....201
Front Fog Lamps.....200
Headlamp.....198
Interior Lamp.....201
License Plate Lamp.....201
Luggage Compartment Lamp, Footwell Lamp and Liftgate Lamp.....202
Reading Lamps.....202
Rear Lamps.....200
Side Direction Indicator.....199
Changing a Fuse.....180
Fuses.....180
Changing a Road Wheel.....238
Dissimilar Spare Wheel and Tire Assembly Information.....238
Stowing the Flat Tire.....241
Tire Change Procedure.....239
Changing the 12V Battery.....193
Remove and Reinstall the Battery.....194
Changing the Engine Air Filter.....209
Changing the Front Wiper Blades.....195
Changing the Rear Wiper Blades.....195
Checking MyKey System Status.....55
MyKey Distance.....55
Number of Admin Keys.....55
Number of MyKeys.....55
Checking the Wiper Blades.....194
Child Restraint and Seatbelt Maintenance.....35
Child Restraint Positioning.....25
Child Safety.....16
General Information.....16
Child Safety Locks.....27
Left-Hand Side.....28
Right-Hand Side.....28
Cigar Lighter.....109
Cleaning Leather Seats.....215
Cleaning Products.....211
Cleaning the Engine.....213
Cleaning the Exterior.....212
Cleaning the Headlamps.....212
Exterior Chrome Parts.....212
Exterior Plastic Parts.....212
Stripes or Graphics.....212
Underbody.....213
Under Hood.....213
Cleaning the Instrument Panel and Instrument Cluster Lens.....214
Cleaning the Interior.....214

2017 Fiesta (CCT) Canada/United States of America, HE8J 19A321 AB enUSA, Edition date: 201607, Second Printing

Cleaning the Wheels.....216
Cleaning the Windows and Wiper Blades.....213
Clearing All MyKeys.....53
Climate Control.....96
Clock.....87
Type 1.....87
Type 2.....87
Clutch Fluid Check - Manual Transmission.....193
Coolant Check
See: Engine Coolant Check.....188
Crash Sensors and Airbag Indicator.....45
Creating a MyKey.....53
Programming/Changing Configurable Settings.....53
Cruise Control.....69
Principle of Operation.....144
Cruise control
See: Using Cruise Control.....144
Customer Assistance.....165

D

Data Recording.....9
Event Data Recording.....10
Service Data Recording.....9
Daytime Running Lamps.....74
Digital Radio.....269
HD Radio Reception and Station Troubleshooting.....270
Direction Indicators.....75
Doors and Locks.....57
Drive Belt Routing - 1.0L EcoBoost™.....210
Drive Belt Routing - 1.6L Duratec-16V Ti-VCT (Sigma).....210
Driver and Passenger Airbags.....38
Children and Airbags.....39
Proper Driver and Front Passenger Seating Adjustment.....38
Driver Knee Airbag.....43
Driving Aids.....146
Driving Hints.....158
Driving Through Water.....158
DRL
See: Daytime Running Lamps.....74

E

Eco Mode.....146
Resetting Eco Mode.....146
Type 1.....146
Economical Driving.....158
Emission Control System.....123
On-Board Diagnostics (OBD-II).....123
Readiness for Inspection and Maintenance (I/M) Testing.....124
End User License Agreement.....414
FordPass Connect Terms and Conditions.....439
VEHICLE SOFTWARE END USER LICENSE AGREEMENT (EULA).....414
Engine Block Heater.....115
Using the Engine Block Heater.....116
Engine Coolant Check.....188
Adding Coolant.....188
Coolant Change.....190
Engine Coolant Temperature Management.....191
Fail-Safe Cooling.....190
Recycled Coolant.....189
Severe Climates.....190
Engine Cooling Fan.....188
Engine Immobilizer
See: Passive Anti-Theft System.....65
Engine Oil Check.....186
Adding Engine Oil.....186
Engine Oil Dipstick - 1.0L EcoBoost™.....186
Engine Oil Dipstick - 1.6L Duratec-16V Ti-VCT (Sigma).....186
Engine Specifications - 1.0L EcoBoost™.....243
Engine Specifications - 1.6L Duratec-16V Ti-VCT (Sigma).....243
Entertainment.....341
AM/FM Radio.....342
Apps.....350
Bluetooth Stereo or USB.....349
CD.....348
HD Radio™ Information (If Available).....345
SiriusXM® Satellite Radio (If Activated).....343
Sources.....342

2017 Fiesta (CCT) Canada/United States of America, HE8J 19A321 AB enUSA, Edition date: 201607, Second Printing

Supported Media Players, Formats and Metadata Information....350
USB Ports....350
Environment....15
Event Data Recording
See: Data Recording....9
Export Unique Options....13
Exterior Mirrors....78
Fold-Away Exterior Mirrors....79
Integrated Blind Spot Mirrors....79
Power Exterior Mirrors....78

F

Fan
See: Engine Cooling Fan....188
Fastening the Seatbelts....30
Seatbelt Locking Modes....31
Using Seatbelts During Pregnancy....30
Floor Mats....159
Fog Lamps - Front
See: Front Fog Lamps....75
Ford Credit....11
US Only....11
Ford Protect....394
Ford Protect Extended Service Plan (CANADA ONLY)....395
Ford Protect Extended Service Plans (U.S. Only)....394
Front Fog Lamps....75
Front Parking Aid....140
Sensing System Audible Warnings....141
Switching the Parking Aid System Off....141
Front Passenger Sensing System....39
Front Wiper Blades
See: Changing the Front Wiper Blades....195
Fuel and Refueling....117
Fuel Consumption....122
Calculating Fuel Economy....122
Filling the Fuel Tank....122
Fuel Filler Funnel Location....118
Fuel Quality....117
Choosing the Right Fuel....117
Fuel Shutoff....161
Fuses....172
Fuse Specification Chart....172
Engine Compartment Fuse Box....172
Passenger Compartment Fuse Box....176

G

Gauges....81
Compass (If Equipped)....81
Engine Coolant Temperature Gauge....82
Fuel Gauge....82
Low Fuel Reminder....82
Gearbox
See: Transmission....126
General Information on Radio Frequencies....47
Intelligent Access....47
General Maintenance Information....396
Multi-Point Inspection....398
Owner Checks and Services....397
Protecting Your Investment....396
Why Maintain Your Vehicle?....396
Why Maintain Your Vehicle at Your Dealership?....396
Getting Assistance Outside the U.S. and Canada....168
Getting the Services You Need....165
Away From Home....165

H

Handbrake
See: Parking Brake....133
Hazard Flashers....161
Headlamp Adjusting
See: Adjusting the Headlamps....195
Headlamp Exit Delay....74
Headlamp Removal
See: Removing a Headlamp....197
Head Restraints....103
Adjusting the Head Restraint....104
Heated Seats....107
Heated Windows and Mirrors....101
Heated Exterior Mirrors....101
Heated Windows....101
Heating
See: Climate Control....96
Hill Start Assist....133
Switching the System On and Off....134
Using Hill Start Assist....134
Hints on Controlling the Interior Climate....98
Cooling the Interior Quickly....100

2017 Fiesta (CCT) Canada/United States of America, HE8J 19A321 AB enUSA, Edition date: 201607, Second Printing

General Hints....98
Heating the Interior Quickly....99
Maximum Cooling Performance in Instrument Panel or Instrument Panel and Footwell Positions....101
Recommended Settings for Cooling 100
Recommended Settings for Heating....99
Side Window Defogging in Cold Weather....101
Vehicle Stationary for Extended Periods During Extreme High Ambient Temperatures....100
Hints on Driving With Anti-Lock Brakes....132
Home Screen....334
Hood Lock
See: Opening and Closing the Hood....182

I

Ignition Switch....112
In California (U.S. Only)....166
Information Displays....86
General Information....86
Information Messages....88
Installing Child Restraints....17
Child Restraints....17
Using Lap and Shoulder Belts....18
Using Lower Anchors and Tethers for Children (LATCH)....20
Using Tether Straps....22
Instrument Cluster....81
Instrument Lighting Dimmer....74
Interior Lamps....75
Front Interior Lamps....75
Rear Interior Lamps....76
Interior Luggage Compartment Release....63
Interior Mirror....79
Auto-Dimming Mirror....80
Introduction....7

J

Jump Starting the Vehicle....162
Connecting the Jumper Cables....162
Jump Starting....163
Preparing Your Vehicle....162
Removing the Jumper Cables....163

K

Keyless Entry....61
Disabled Keys....62
General Information....61
Locking and Unlocking the Doors With the Key Blade....63
Locking Your Vehicle....61
Passive Key....61
Unlocking Your Vehicle....62
Keyless Starting....112
Failure to Start....113
Ignition On....113
Starting with Automatic Transmission....113
Starting with Manual Transmission....113
Stopping the Engine When Your Vehicle is Moving....114
Stopping the Engine with Your Vehicle Stationary....114
Keys and Remote Controls....47

L

Lighting Control....72
Headlamp Flasher....73
High Beams....73
Lighting Control Positions....72
Parking Lamps....72
Lighting....72
General Information....72
Load Carrying....148
Load Limit....149
Special Loading Instructions for Owners of Pick-up Trucks and Utility-type Vehicles....154
Vehicle Loading - with and without a Trailer....149
Locking and Unlocking....57
Auto Lock Feature....58
Auto Unlock Feature....59
Emergency Locking With the Key....59
Locking and Unlocking the Doors From Inside....57
Locking and Unlocking the Doors With the Key....57

2017 Fiesta (CCT) Canada/United States of America, HE8J 19A321 AB enUSA, Edition date: 201607, Second Printing

Remote Control.....57
Smart Unlocks for Integrated Keyhead Transmitter.....58
Smart Unlocks for Intelligent Access Keys.....58
Unlocking the Doors With the Interior Door Handles.....58
Luggage Covers.....148
Removing the Cover.....149
Lug Nuts
See: Changing a Road Wheel.....238

M

Maintenance.....182
General Information.....182
Manual Climate Control.....96
Manual Liftgate.....60
Opening and Closing the Liftgate.....60
Manual Seats.....105
Adjusting the Height of the Driver Seat.....105
Adjusting the Lumbar Support.....105
Moving the Seat Backward and Forward.....105
Recline Adjustment.....106
Manual Transmission.....126
Parking Your Vehicle.....127
Recommended Shift Speeds.....126
Reverse.....127
Using the Clutch.....126
Media Hub.....275
Message Center
See: Information Displays.....86
Mirrors
See: Heated Windows and Mirrors.....101
See: Windows and Mirrors.....77
Mobile Communications Equipment.....13
Moonroof.....80
Moonroof Sliding Shade.....80
Opening and Closing the Moonroof.....80
Venting the Moonroof.....80
Motorcraft Parts - 1.0L EcoBoost™.....246
Motorcraft Parts - 1.6L Duratec-16V Ti-VCT (Sigma).....247
MyKey Troubleshooting.....55
MyKey™.....52
Principle of Operation.....52

N

Navigation.....356
cityseeker.....363
Destination Mode.....358
Map Mode.....357
Navigation Map Updates.....364
Navigation Menu.....361
SiriusXM Traffic and Travel Link.....364
Waypoints.....362
Normal Scheduled Maintenance.....399

O

Oil Change Indicator Reset.....187
Resetting the Oil Life Monitoring System.....187
Oil Check
See: Engine Oil Check.....186
Opening and Closing the Hood.....182
Closing the Hood.....183
Opening the Hood.....182
Ordering Additional Owner's Literature.....169
Obtaining a French Owner’s Manual.....170
Overhead Console.....111

P

Parking Aids.....138
Principle of Operation.....138
Parking Brake.....133
All Vehicles.....133
Vehicles With Automatic Transmission.....133
Vehicles With Manual Transmission.....133
Passive Anti-Theft System.....65
SecuriLock®.....65
PATS
See: Passive Anti-Theft System.....65
Perchlorate.....11
Personalized Settings.....88
Measure Units.....88
Switching Chimes Off.....88

2017 Fiesta (CCT) Canada/United States of America, HE8J 19A321 AB enUSA, Edition date: 201607, Second Printing

Personal Safety System™.....36
How Does the Personal Safety System Work?.....36
Phone.....351
During a Phone Call.....354
Making Calls.....353
Pairing Your Cell Phone for the First Time.....351
Phone Menu.....352
Receiving Calls.....354
Smartphone Connectivity.....355
Text Messaging.....355
Power Door Locks
See: Locking and Unlocking.....57
Power Windows.....77
Accessory Delay.....78
Bounce-Back.....77
One-Touch Down.....77
One-Touch Up.....77
Window Lock.....77
Protecting the Environment.....15

R

Rear Parking Aid.....138
Rear Seats.....106
Folding the Seatback.....106
Unfolding the Seatback.....107
Rear Under Floor Storage.....148
Adjustable Load Floor.....148
Rear View Camera.....141
Switching the Rear View Camera Off.....143
Switching the Rear View Camera On.....142
Using the Rear View Camera.....142
Rear View Camera
See: Rear View Camera.....141
Rear Window Wiper and Washers.....71
Intermittent Wipe.....71
Rear Window Washer.....71
Reverse Gear Wipe.....71
Rear Wiper Blades
See: Changing the Rear Wiper Blades.....195
Refueling.....120
System Warnings.....121
Remote Control.....47
Car Finder.....51
Integrated Keyhead Transmitter.....47
Intelligent Access Transmitter.....48
Programming a New Integrated Keyhead Transmitter.....48
Replacing the Battery.....49
Reprogramming the Unlocking Function.....48
Sounding a Panic Alarm.....51
Remote Start.....102
Removing a Headlamp.....197
Repairing Minor Paint Damage.....216
Replacement Parts Recommendation.....12
Collision Repairs.....12
Scheduled Maintenance and Mechanical Repairs.....12
Warranty on Replacement Parts.....12
Replacing a Lost Key or Remote Control.....51
Reporting Safety Defects (Canada Only).....170
Reporting Safety Defects (U.S. Only).....170
Roadside Assistance.....160
Vehicles Sold in Canada: Getting Roadside Assistance.....161
Vehicles Sold in Canada: Roadside Assistance Program Coverage.....161
Vehicles Sold in Canada: Using Roadside Assistance.....161
Vehicles Sold in the United States: Getting Roadside Assistance.....160
Vehicles Sold in the United States: Using Roadside Assistance.....160
Roadside Emergencies.....160
Running-In
See: Breaking-In.....158
Running Out of Fuel.....118
Adding Fuel From a Portable Fuel Container.....119
Filling a Portable Fuel Container.....118

S

Safety Canopy™ - Vehicles Built From: 06-03-2017.....44
Safety Precautions.....117
Satellite Radio.....272
Satellite Radio Electronic Serial Number (ESN).....273

2017 Fiesta (CCT) Canada/United States of America, HE8J 19A321 AB enUSA, Edition date: 201607, Second Printing

Satellite Radio Reception Factors.....272
SIRIUS® Satellite Radio Service.....272
Troubleshooting.....273
Scheduled Maintenance Record.....404
Scheduled Maintenance.....396
Seatbelt Extension.....35
Seatbelt Height Adjustment.....32
Seatbelt Reminder.....33
Belt-Minder™.....33
Seatbelts.....29
Principle of Operation.....29
Seatbelt Warning Lamp and Indicator Chime.....32
Conditions of operation.....33
Seats.....103
Security.....65
Settings.....367
911 Assist.....372
Ambient Lighting.....377
Bluetooth.....369
Clock.....368
Display.....378
General.....376
Media Player.....368
Mobile Apps.....375
Navigation.....373
Phone.....369
Radio.....372
Sound.....367
Valet Mode.....379
Vehicle.....377
Voice Control.....379
Wi-Fi.....377
Side Airbags.....42
Side Curtain Airbags.....43
Sitting in the Correct Position.....103
Snow Chains
See: Using Snow Chains.....234
Special Notices.....12
New Vehicle Limited Warranty.....12
On Board Diagnostics Data Link Connector.....13
Special Instructions.....12
Special Operating Conditions Scheduled Maintenance.....402
Exceptions.....403
Speed Control
See: Cruise Control.....144
Stability Control.....136
Principle of Operation.....136
Starter Switch
See: Ignition Switch.....112
Starting a Gasoline Engine.....114
Cold or Hot Engine.....114
Engine Idle Speed after Starting.....115
Failure to Start.....115
Flooded Engine.....115
Starting and Stopping the Engine.....112
General Information.....112
Steering.....146
Electric Power Steering.....146
Steering Wheel.....68
Storage Compartments.....111
Sunroof
See: Moonroof.....80
Supplementary Restraints System.....37
Principle of Operation.....37
Switching Off the Engine.....115
Vehicles With a Turbocharger.....115
Symbols Glossary.....7
SYNC™ 3.....323
General Information.....323
SYNC™ 3 Troubleshooting.....379
SYNC™ Applications and Services.....294
911 Assist.....294
SYNC Services: Traffic, Directions & Information (TDI) (If Equipped, United States Only).....298
Vehicle Health Report (If Equipped, United States Only).....296
SYNC™ AppLink™.....302
SYNC Mobile Apps.....302
SYNC™.....276
General Information.....276
SYNC™ Troubleshooting.....314

T

Tailgate
See: Manual Liftgate.....60
Technical Specifications
See: Capacities and Specifications.....243
The Better Business Bureau (BBB) Auto Line Program (U.S. Only).....167

2017 Fiesta (CCT) Canada/United States of America, HE8J 19A321 AB enUSA, Edition date: 201607, Second Printing

Tire Care.....219
Glossary of Tire Terminology.....221
Important information for 205/40R17 low-profile tires and wheels.....219
Information About Uniform Tire Quality Grading.....219
Information Contained on the Tire Sidewall.....222
Temperature A B C.....220
Traction AA A B C.....220
Treadwear.....220
Tire Pressure Monitoring System.....234
Changing Tires With a Tire Pressure Monitoring System.....235
Understanding Your Tire Pressure Monitoring System 236
Tires
See: Wheels and Tires.....219
Towing a Trailer.....155
Towing the Vehicle on Four Wheels.....155
Emergency Towing.....155
Recreational Towing.....156
Towing.....155
Traction Control.....135
Principle of Operation.....135
Transmission Code Designation.....249
Transmission Specifications - 1.0L EcoBoost™, Automatic Transmission.....243
Transmission Specifications - 1.6L Duratec-16V Ti-VCT (Sigma), Automatic Transmission.....244
Transmission Specifications - 5-Speed Manual Transmission.....245
Transmission.....126
Transporting the Vehicle.....155
Trip Computer.....87

U

Under Hood Overview - 1.0L EcoBoost™.....184
Under Hood Overview - 1.6L Duratec-16V Ti-VCT (Sigma).....185
USB Port.....275
Using Cruise Control.....144
Switching Cruise Control Off.....145
Switching Cruise Control On.....144
Using MyKey With Remote Start Systems.....55
Using Snow Chains.....234
Using Stability Control.....137
Using Summer Tires.....234
Using SYNC™ With Your Media Player.....304
Accessing Your Play Menu.....309
Connecting Your Digital Media Player to the USB Port.....304
Media Menu Features.....307
Media Voice Commands.....306
System Settings.....311
What's Playing?.....305
Using SYNC™ With Your Phone.....281
Accessing Features Through the Phone Menu.....285
Accessing Your Phone Settings.....290
Making a Call.....284
Pairing a Cell Phone for the First Time.....281
Pairing Subsequent Cell Phones.....282
Phone Options during an Active Call.....284
Phone Voice Commands.....282
Receiving Calls.....284
System Settings.....291
Text Messaging.....288
Using Traction Control.....135
Switching the System Off.....135
System Indicator Lights and Messages.....135
Using a Switch.....135
Using the Information Display Controls.....135
Using Voice Recognition.....278
Audio Voice Commands.....336
Initiating a Voice Session.....278
Mobile App Voice Commands.....339
Navigation Voice Commands.....338
Phone Voice Commands.....337
SiriusXM Traffic and Travel Link Voice Commands.....340
System Interaction and Feedback.....279
Voice Settings Commands.....340
Using Winter Tires.....234
Utilizing the Mediation/Arbitration Program (Canada Only).....168

2017 Fiesta (CCT) Canada/United States of America, HE8J 19A321 AB enUSA, Edition date: 201607, Second Printing

V

Vehicle Care.....211
Vehicle Certification Label.....249
Vehicle Identification Number.....248
Vehicle Storage.....216
Battery.....217
Body.....217
Brakes.....217
Cooling system.....217
Engine.....217
Fuel system.....217
General.....216
Miscellaneous.....217
Removing Vehicle From Storage.....217
Tires.....217
Ventilation
See: Climate Control.....96
VIN
See: Vehicle Identification Number.....248
Voice Control.....69

W

Warning Lamps and Indicators.....82
Airbag Warning Lamp.....82
Anti-Lock Brake System Warning Lamp.....82
Brake System Warning Lamp.....82
Cruise Control Indicator.....83
Direction Indicator.....83
Door Ajar Warning Lamp.....83
Engine Coolant Temperature Warning Lamp.....83
Engine Warning Lamps.....83
Fasten Seatbelt Warning Lamp.....83
Front Fog Lamp Indicator.....84
Headlamp High Beam Indicator.....84
Ignition Warning Lamp.....84
Lamps on Indicator.....84
Low Fuel Level Warning Lamp.....84
Low Tire Pressure Warning Lamp.....84
Message Center Indicator.....84
Oil Pressure Warning Lamp.....84
Shift Indicator.....84
Stability Control and Traction Control Indicator.....84
Stability Control and Traction Control Off Warning Lamp.....84
Washer Fluid Check.....193
Washers
See: Cleaning the Exterior.....212
See: Wipers and Washers.....70
Waxing.....213
Wheel Nuts
See: Changing a Road Wheel.....238
Wheels and Tires.....219
General Information.....219
Technical Specifications.....242
Windows and Mirrors.....77
Windshield Washers.....70
Windshield Wipers.....70
Intermittent Wipe.....70
Speed Dependent Wipers.....70
Winter Tires
See: Using Winter Tires.....234
Wiper Blades
See: Checking the Wiper Blades.....194
Wipers and Washers.....70
Wrecker Towing
See: Transporting the Vehicle.....155

2017 Fiesta (CCT) Canada/United States of America, HE8J 19A321 AB enUSA, Edition date: 201607, Second Printing